Department of Defense
Human Resources Management

11/08/05

Personnel Visibility Executive Overview

Previous Problems with Personnel Visibility

- Joint Task Force commanders have not had a single source for:
  - Who is part of the Task Force from all services, agencies, activities, coalition partners, local nationals, and supporting contractors?
  - What skills does each person have for potential use in the operation?
  - Where are these people located within the Theater or enroute?
- DoD medical and other absences have not been clearly visible
- DoD payrolls have not been correct because of visibility gaps
- DoD families have not received correct benefits because of visibility gaps

Personnel Visibility Scope

Personnel Visibility (PV) is defined as having real time, reliable information on military service members, civilian employees, military retirees, contractors (in theater) and other US personnel, across the full spectrum -- during peacetime and war

- PV will fuse information on personnel numbers, competencies, reception accounting, individual readiness, patient accountability, status reporting, and a person's unit and location to support decision-making
  - PV, through the summation of service personnel, civilian employee, and contractor status reports, will help Commanders and/or Managers view the force in-theater and determine if a mission is supportable from a personnel perspective
  - Through PV, Commanders will have access to data on civilian acquired skills that enables a broader view of his personnel's competencies
  - PV will enable quicker casualty reporting
- PV will facilitate timely and accurate access to compensation and benefits for DoD personnel

How Does Architecture Relate to the Real World?

AV-1/2 Scope and Definition	Executive Overview and Encyclopedia
OV-2 Operational Nodes	Who does what?
OV-3 Information Exchange	Who Says What to Whom?
OV-5 Activity Model	What gets done?
OV-6a Business Rules	What are the rules?
OV-6c Process Model	How do things get done?
OV-7 Data Model	What information is needed?
SV-1 System Interfaces	What IT resources are available to support what gets done?
SV-5 System Functions Map	What can be supported through IT automation?
SV-6 Systems Information Exchange	What information is exchanged between systems?
TV-1 Standards	What are the standards?

. . . provides . . .

Capabilities and Requirements

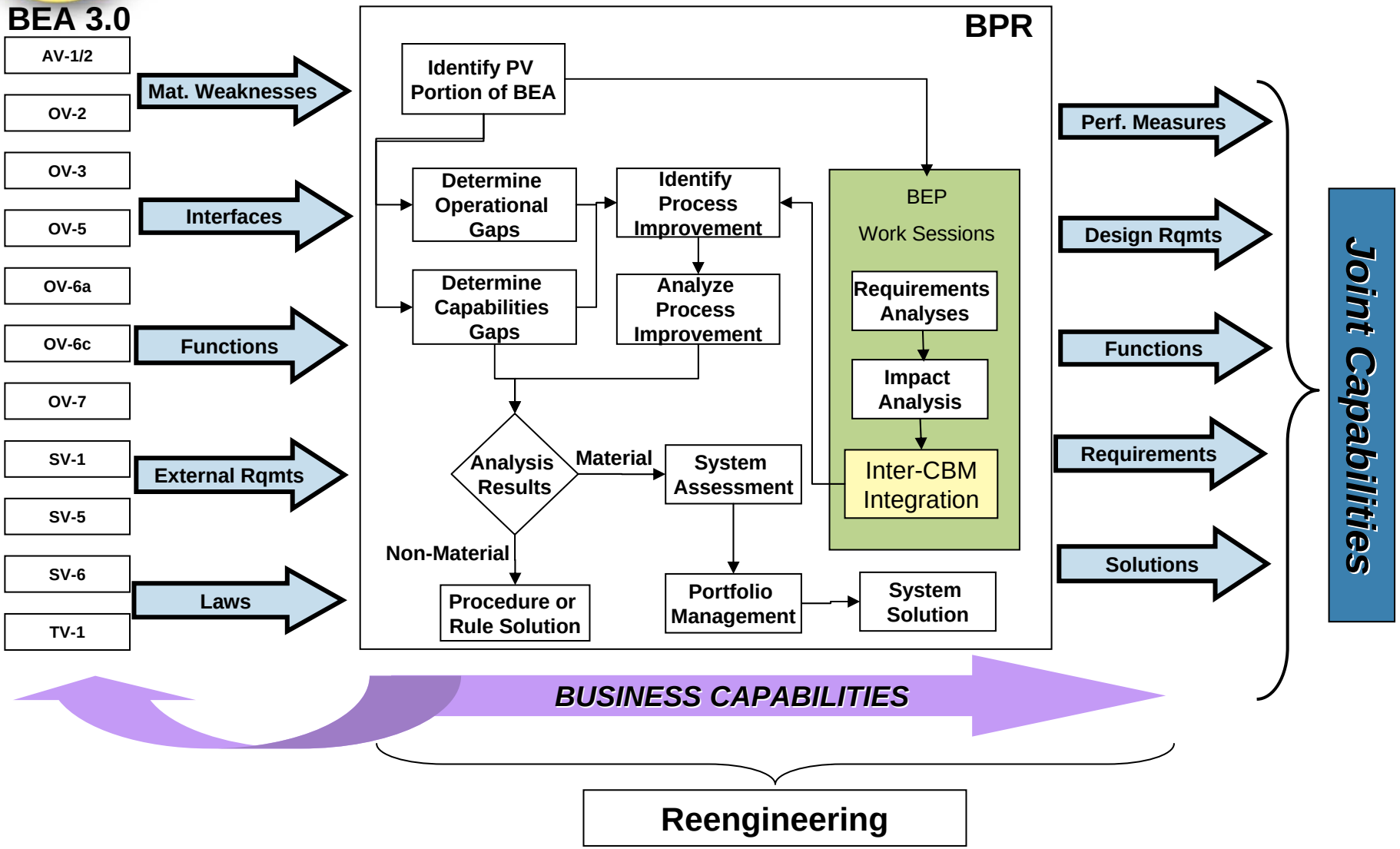

Transforming HRM Through Personnel Visibility

- The goal of the Enterprise is to promote more effective information utilization across the enterprise
- Transformed HRM business processes provide the foundation for HRM enterprise systems by:
  - Allowing for information to be transferred, stored, and shared in a easy, effective way
  - Replacing stove-piped systems
- Expedient information sharing ensures improved personnel visibility across the Department and world-wide
- HRM has four enterprise systems enabling Personnel Visibility: DIMHRS, DCPDS, DTS, and CHCSII

Enterprise Systems Evolution Diagrams

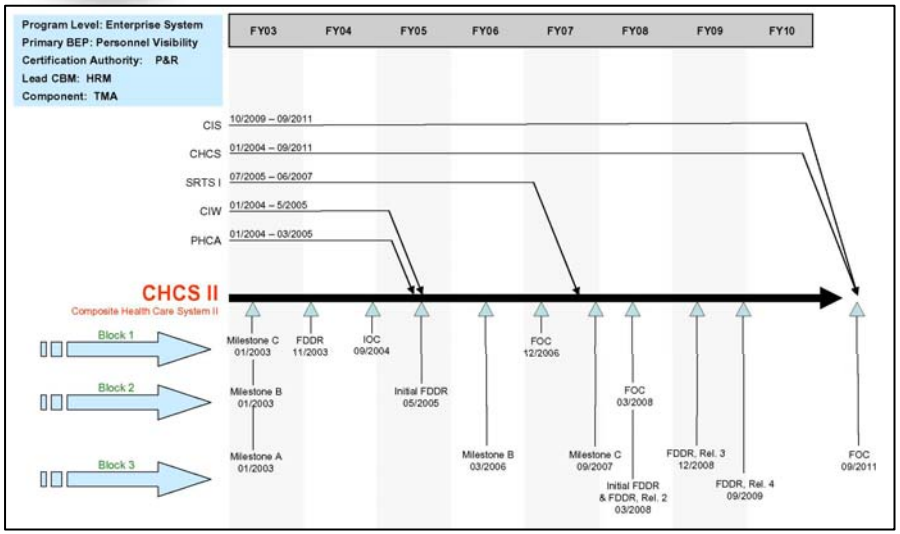

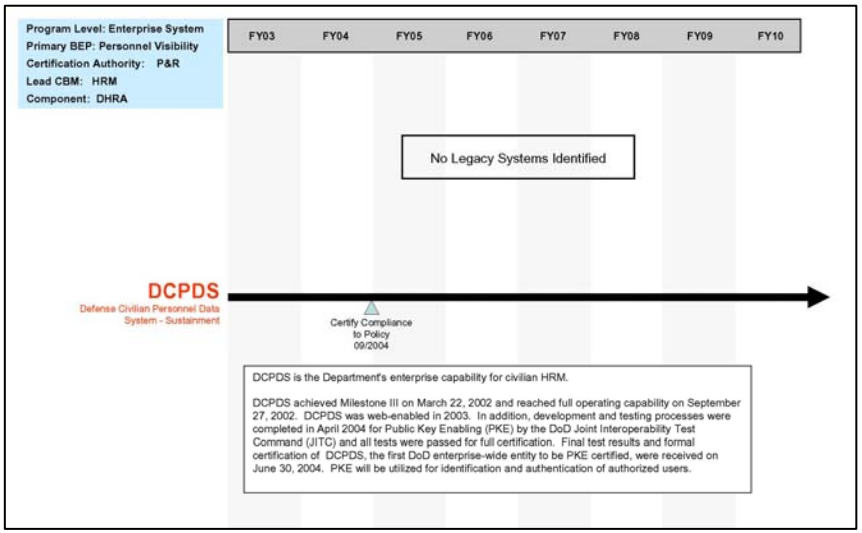

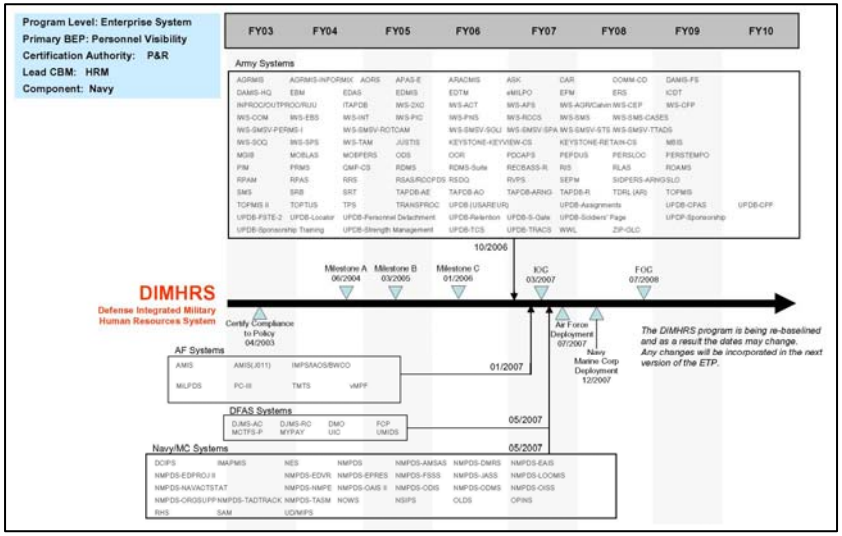

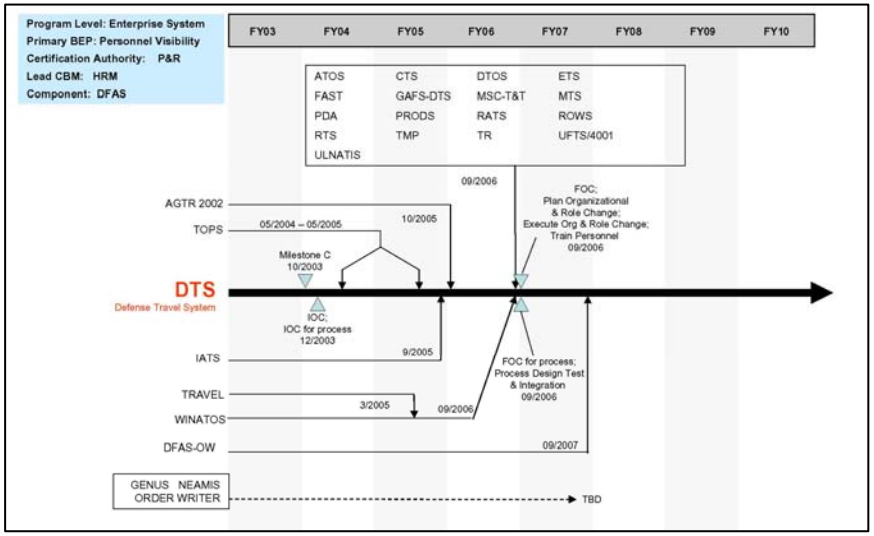

Enterprise Architecture as a Transformation Tool

- Enterprise architecture is a framework for documenting organizational facts, relationships, and processes in context
  - Architecture products provide a framework for documenting an organization's human, intellectual and technical capital
  - Architecture enables the understanding of complex interactions between the different lines of business of an organization, its stakeholders, and its customers
- Architecture is used in the requirements, design, implementation, and operation of systems to enable exploration, common understanding, unit of effort, and disciplined control of expectations
- Architecture documents define top-level operational goals, constraints, and guidance to enable a more coherent and consistent approach to enterprise system design and implementation

Enterprise Architecture as a Transformation Enabler

- Personnel Visibility Thread
  - Reviews have not identified any gaps in BEA 3.0 PV high level function depictions
  - Interactions with other Core Business Mission Areas are ongoing
  - Sufficient clarity has been achieved to support current certification process

Personnel Visibility Highlighted on the HRM OV-5

OV-5: Operational Activity Node Model

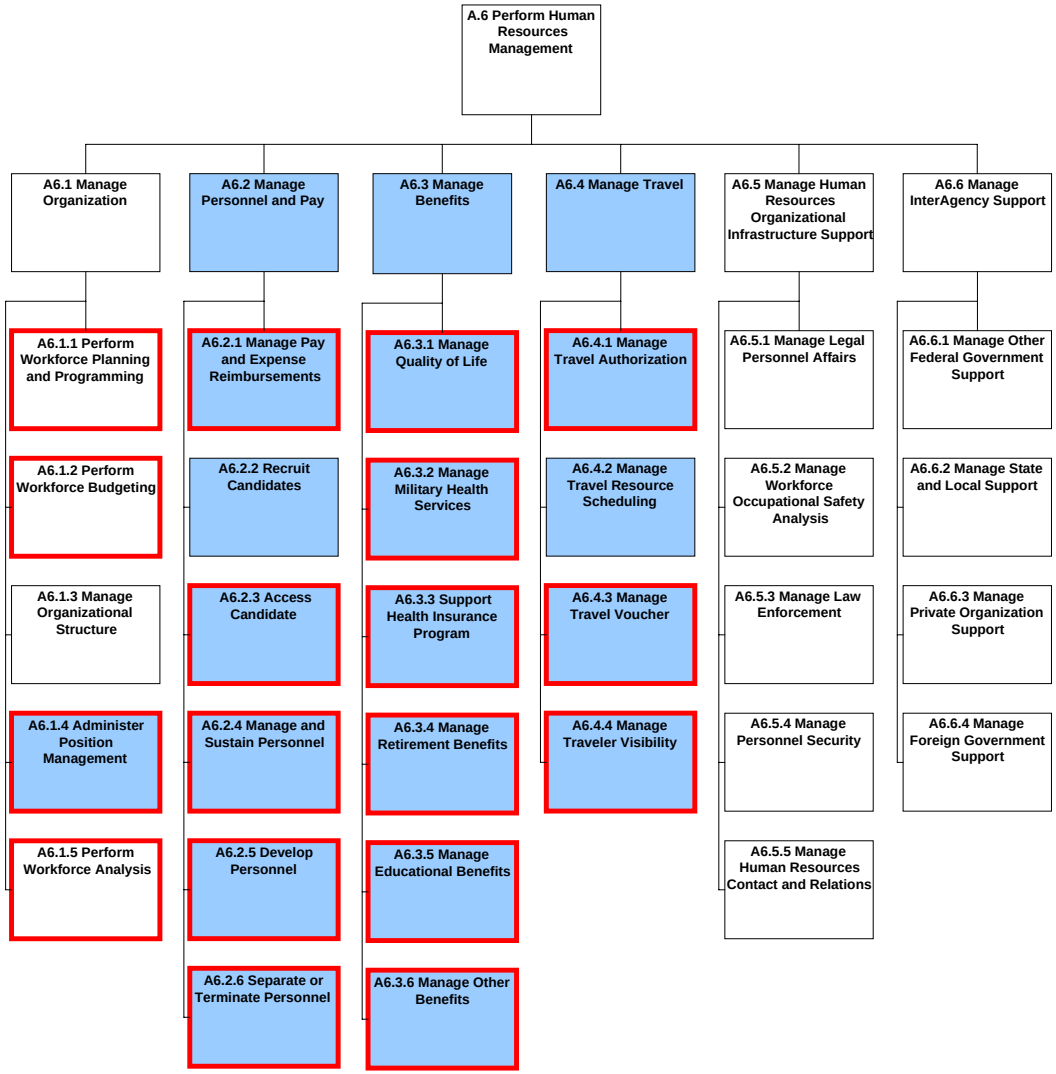

Personnel Visibility and the Business Enterprise Architecture (BEA)

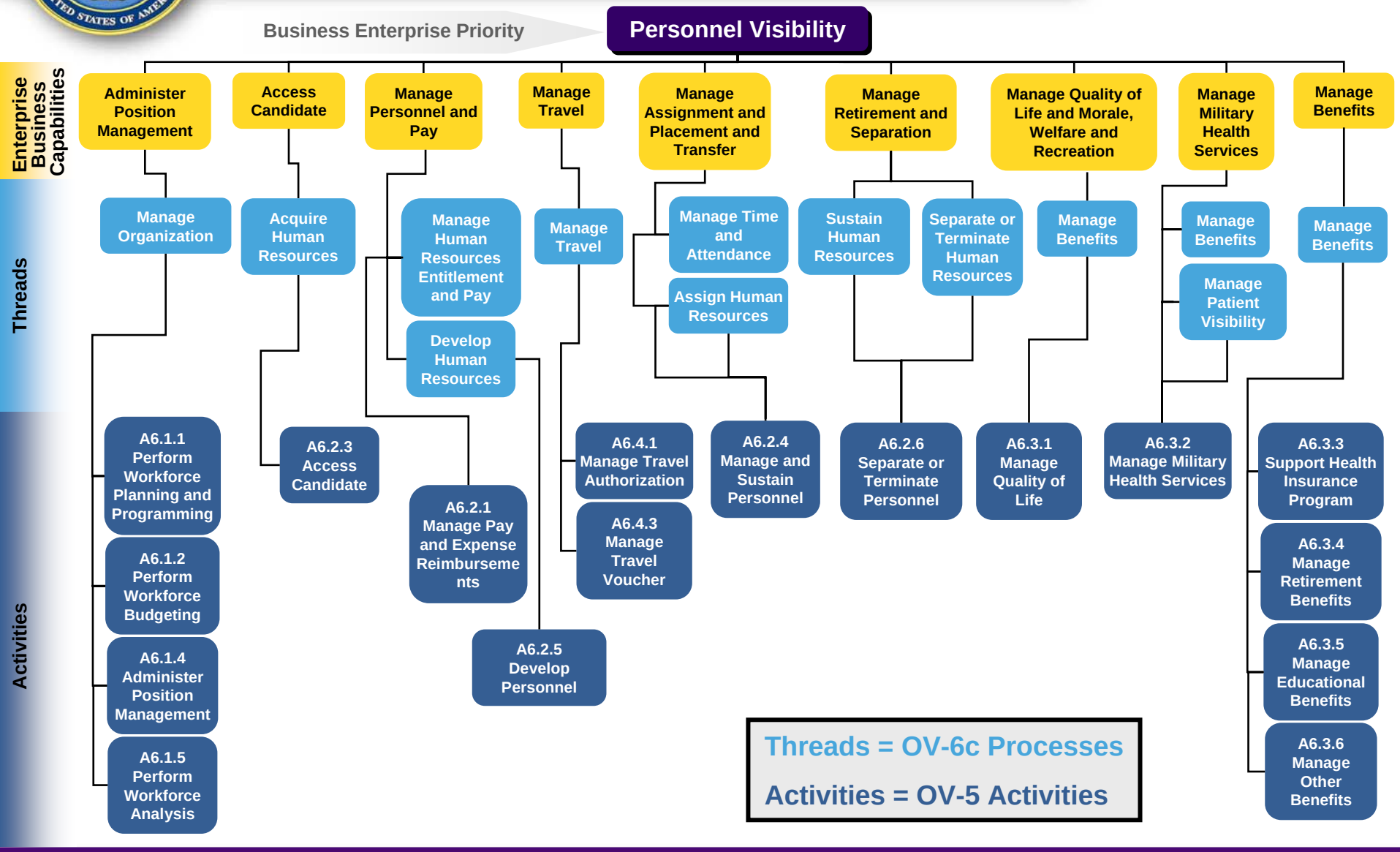

Questions for the Enterprise

- **Who are our people?**
  - Who are our personnel (e.g., active, reserve, guard, civilian)?
  - What is the member's/employee's service/organization?
- **Where are our people located?**
  - How many members/employees are in theater?
  - How many members/employees are located in each duty status?
- **How can we effectively use our personnel?**
  - What are our people's skills?
  - What skill sets are we lacking?
  - How can we better acquire skills to match our needs?
- **How do we ensure our people's compensation?**
  - How many of our members are paid accurately and timely based on who they are, where they are, and the member's skill sets?
  - Are financial commitments and obligations being generated at the appropriate point in the personnel/pay lifecycle?
  - What are the benefits/compensations to which the member/employee and their beneficiaries are entitled?
  - Is the member/employee and their beneficiaries receiving the benefits/compensation to which they are entitled?
  - What is the timeliness of pay change transactions based on effective date compared to the processing date of transactions?
  - What is the timeliness of pay change transactions based on the effective date compared to the end of month payday for transactions?
  - What is the timeliness of resolution of pay problems?

Questions for the Enterprise

- **Who are our people?**
  - Who are our personnel (e.g., active, reserve, guard, civilian)?
  - What is the member's/employee's service/organization?
- **Where are our people located?**
  - How many members/employees are in theater?
  - How many members/employees are located in each duty status?
- **How can we effectively use our personnel?**
  - What are our people's skills?
  - What skill sets are we lacking?
  - How can we better acquire skills to match our needs?
- **How do we ensure our people's compensation?**
  - How many of our members are paid accurately and timely based on who they are, where they are and the member's skill sets?
  - Are financial commitments and obligations being generated at the appropriate point in the personnel/pay lifecycle?
  - What are the benefits/compensations to which the member/employee and their beneficiaries are entitled?
  - Is the member/employee and their beneficiaries receiving the benefits/compensation to which they are entitled?
  - What is the timeliness of pay change transactions based on effective date compared to the processing date of transactions?
  - What is the timeliness of pay change transactions based on the effective date compared to the end of month payday for transactions?
  - What is the timeliness of resolution of pay problems?

Who Are Our People? (OV-6c)

OV-6c: Operational Event /Trace Description

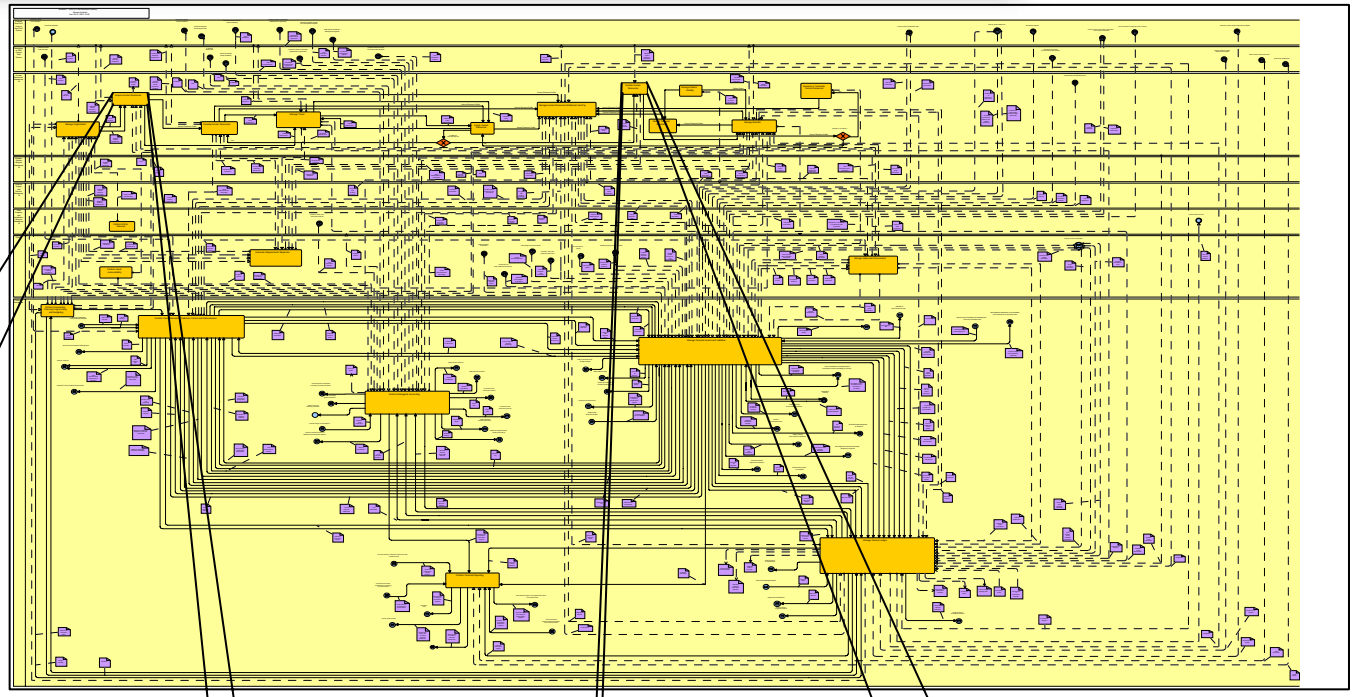

Acquire Human Resources

Sustain Human Resources

Who Are Our People? (OV-5)

OV-5: Operational Activity Model

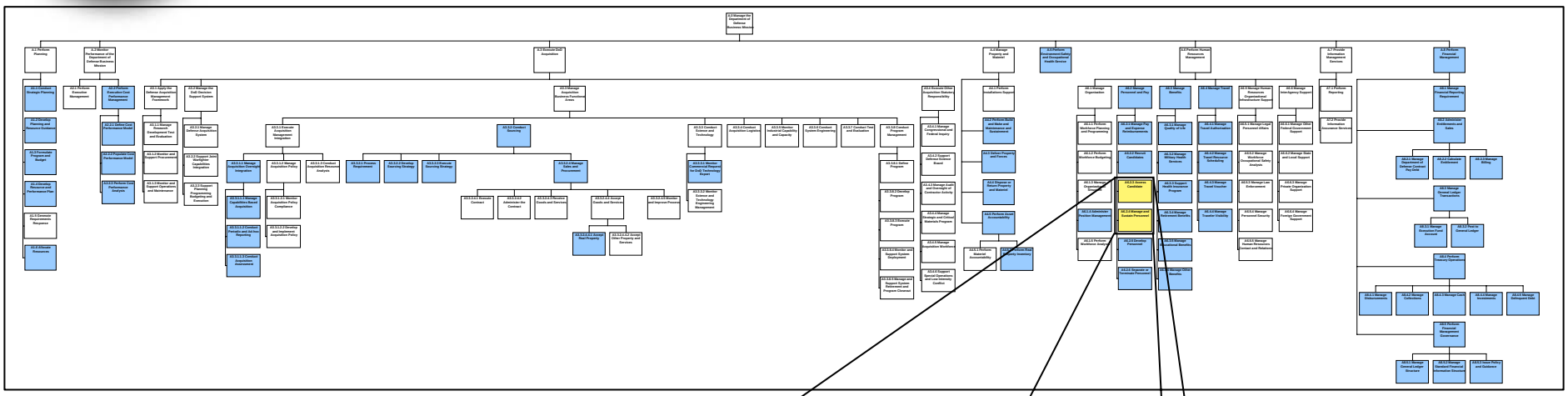

A6.2.3 Access Candidate

A6.2.4 Manage and Sustain Personnel

Activities that track our people:

- Access Candidate
- Manage and Sustain Personnel

Who are our people? (OV-6a)

Business Rule Example :

Name: ENT_Disclosure_Privacy_Law

Rule: "Each condition of disclosure of records about a person must comply with the Privacy law."

Reference: Title 5 (Organization & Employees), Part I, Chapter 5, Subchapter II, Section 552a (The Privacy Act of 1974).

References Used to Develop BRs:

Title 5 (Organization & Employees)

Title 10 (Armed Forces)

Title 20 (Education)

Title 29 (Labor)

Title 32 (National Guard)

Title 37 (Pay and Allowances of the Uniformed Services)

Title 38 (Veterans' Benefits)

Title 42 (The Public Health and Welfare)

Who Are Our People? (OV-3)

OV-3: Operational Information Exchange Matrix

Need Line	Information Exchange	Source Node	Source Activity	Destination Node	Destination Activity	Referenced Data	Content
External - HRM	Human Resource Information	External	Provide Human Resources Profile Information	HRM	Separate or Terminate Personnel Access Candidate Develop Personnel Manage and Sustain Personnel Recruit Candidates	ADMINISTRATIVE-CONDITION-EVENT ADMINISTRATIVE-EVENT ASSIGNMENT COMPETENCY FOREIGN-ORGANIZATION HEALTH-CONDITION HEALTH-SERVICE-ENCOUNTER-EXAMINATION INSTRUCTIONAL-UNIT INSTRUCTIONAL-UNIT-DEVELOPMENT-PLAN-ITEM OCCUPATION OCCUPATION-CLASSIFICATION OCCUPATION-COMPETENCY OCCUPATION-POSITION OCCUPATION-SKILL PERFORMANCE-EXAMINATION PERSON-COMPETENCY PERSON-OCCUPATION PERSON-PERSONNEL-PROGRAM PERSON-PROFILE PERSON-SKILL POSITION POSITION-COMPETENCY POSITION-EXAMINATION POSITION-PERSONNEL-PROGRAM POSITION-SKILL POSITION-WORK-LOCATION PULHESX-EXAMINATION SEX-CATEGORY SKILL SKILL-COMPETENCY US-DOD-ORGANIZATION	This is an extraction of selected data related to a human resource application and human resource profile request.

Who Are Our People? (OV-7)

OV-7: Logical Data Model

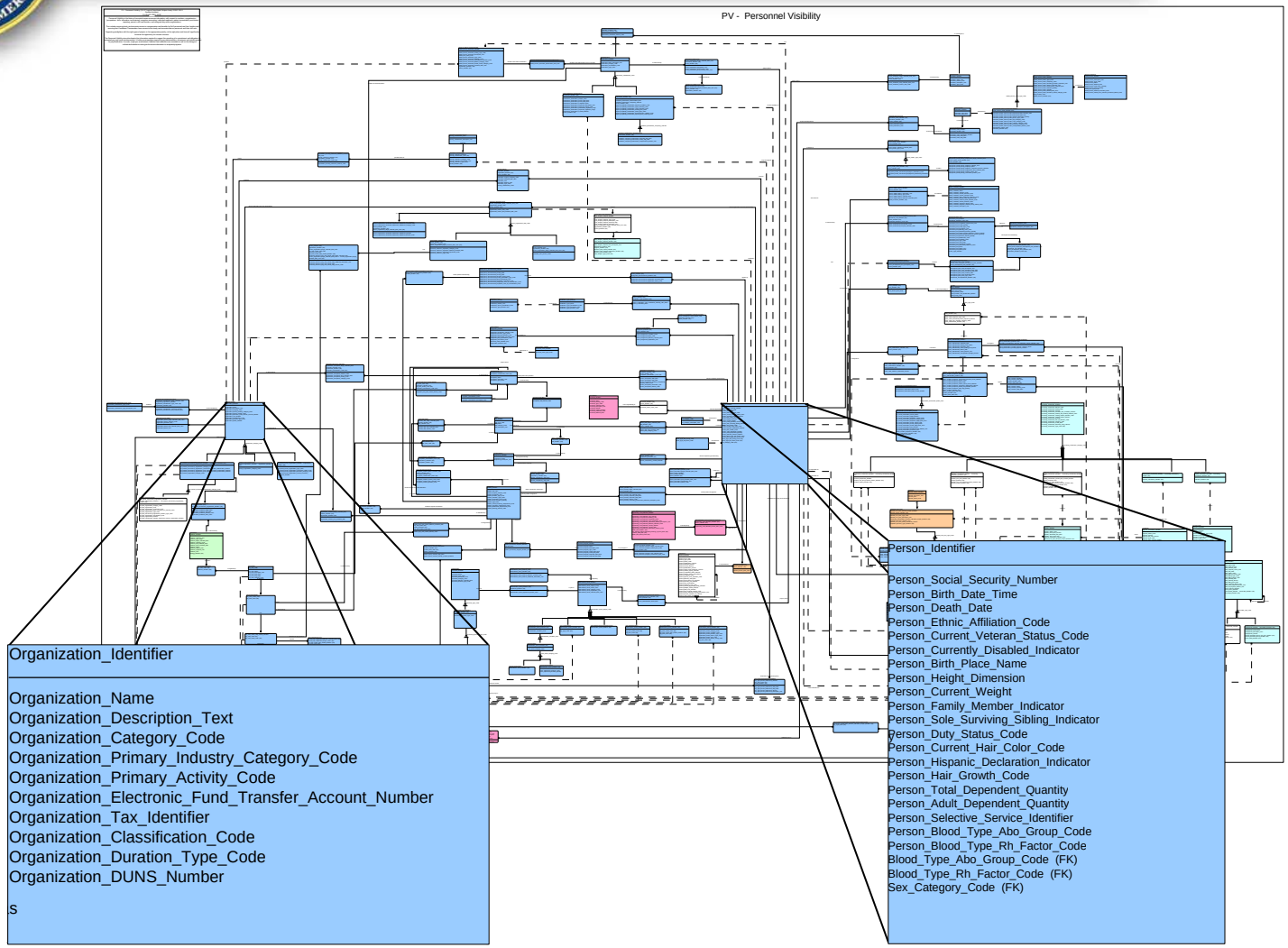

Who Are Our People? (SV-1)

SV-1: System Interface Diagram

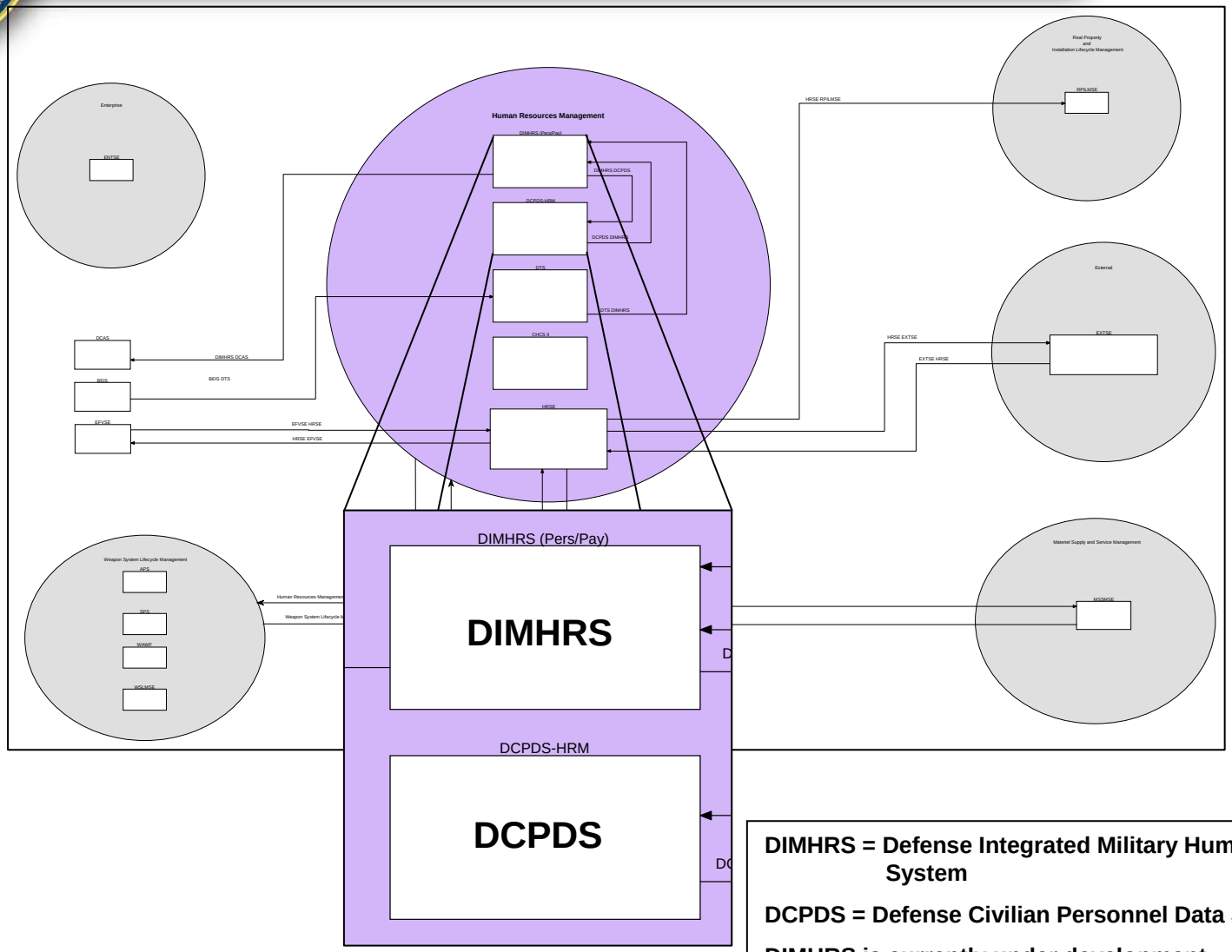

DIMHRS = Defense Integrated Military Human Resources System

DCPDS = Defense Civilian Personnel Data System

DIMHRS is currently under development.

Who Are Our People? (SV-5)

SV-5: Operational Activity/Systems Function Traceability Matrix

Operational Activity		BEP System Name		System Function
Access Candidate		DIMHRS, DCPDS		Perform Personnel Management
Manage and Sustain Personnel		DIMHRS, DCPDS		Perform Personnel Management

Questions for the Enterprise

- **Who are our people?**
  - Who are our personnel (e.g., active, reserve, guard, civilian)?
  - What is the member's/employee's service/organization?
- **Where are our people located?**
  - How many members/employees are in theater?
  - How many members/employees are located in each duty status?
- **How can we effectively use our personnel?**
  - What are our people's skills?
  - What skill sets are we lacking?
  - How can we better acquire skills to match our needs?
- **How do we ensure our people's compensation?**
  - How many of our members are paid accurately and timely based on who they are, where they are and the member's skill sets?
  - Are financial commitments and obligations being generated at the appropriate point in the personnel/pay lifecycle?
  - What are the benefits/compensations to which the member/employee and their beneficiaries are entitled?
  - Is the member/employee and their beneficiaries receiving the benefits/compensation to which they are entitled?
  - What is the timeliness of pay change transactions based on effective date compared to the processing date of transactions?
  - What is the timeliness of pay change transactions based on the effective date compared to the end of month payday for transactions?
  - What is the timeliness of resolution of pay problems?

Where Are Our People Located? (OV-6c)

OV-6c: Operational Event /Trace Description

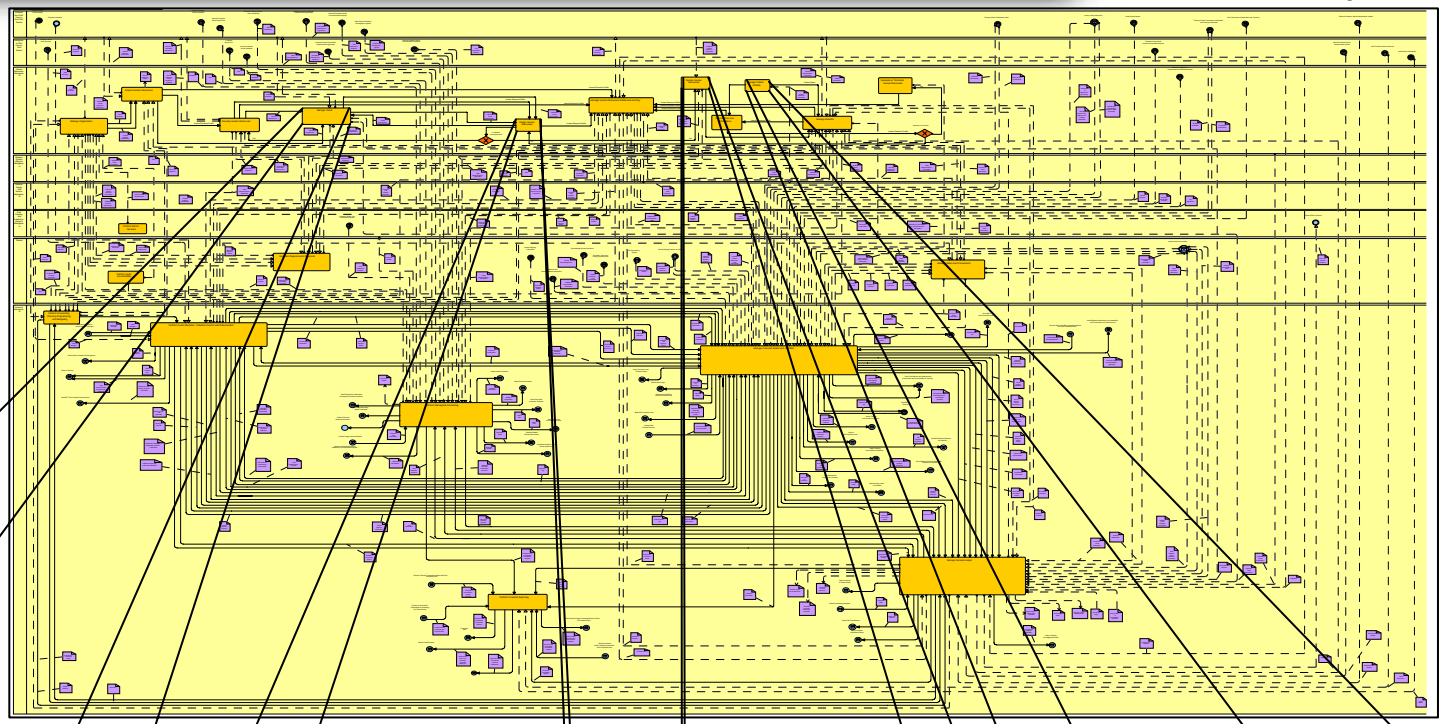

Manage Travel

Assign Human Resources

Sustain Human Resources

Manage Patient Visibility

Where Are Our People Located? (OV-5)

OV-5: Operational Activity Model

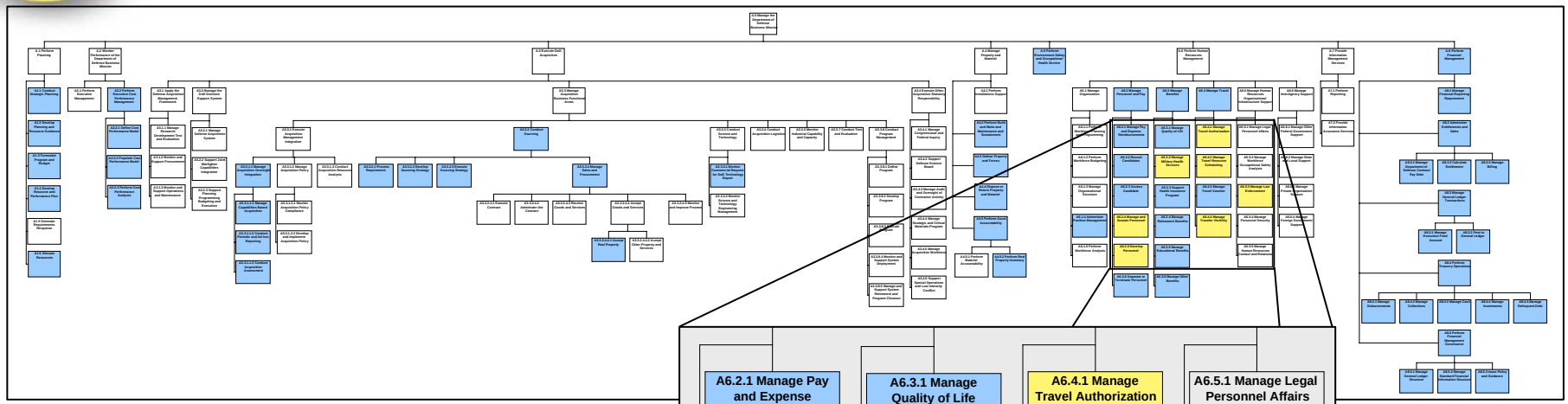

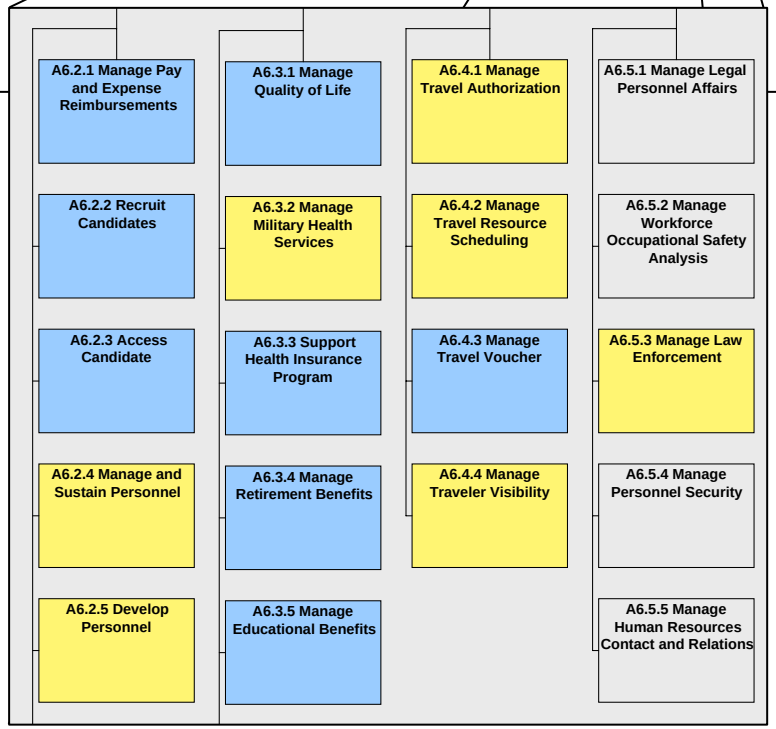

Activities that track our people's location:

- Manage and Sustain Personnel
- Develop Personnel
- Manage Military Health Services
- Manage Travel Authorization
- Manage Travel Resource Scheduling
- Manage Traveler Visibility
- Manage Law Enforcement

Where Are Our People Located? (OV-3)

OV-3: Operational Information Exchange Matrix

Need Line	Information Exchange	Source Node	Source Activity	Destination Node	Destination Activity	Referenced Data	Content
HRM - WSLM	Transportation Requirement	HRM	Manage Travel Resource Scheduling Manage Travel Authorization	WSLM	Generate Requirements Response	AIR-TRAVEL-RESERVATION CONTRACT EVACUATION EVACUATION-HEALTH-SERVICE-ORDER EVACUATION-POINT GUIDANCE LIABILITY-TRANSACTION PERSON PERSON-EVACUATION TRANSPORTATION-RESERVATION TRAVEL-LOCATION TRAVEL-LOCATION-SEQUENCE	This is the logistics requirement needed to accomplish a transportation obligation for an organization/customer.
HRM - WSLM	Travel Requirement	HRM	Manage Military Health Services Access Candidate Recruit Candidates Separate or Terminate Personnel Develop Personnel Manage and Sustain Personnel	WSLM	Generate Requirements Response	CONTRACT GUIDANCE PERSON TRANSPORTATION-RESERVATION TRAVEL-AUTHORIZATION TRAVEL-LOCATION TRAVEL-LOCATION-SEQUENCE	This requirement defines an organization's or person's need for travel, including movement of goods, using the travel card (where authorized). It may be an unfunded or funded requirement.
HRM - External	Travel Substantiation Information	HRM	Manage Travel Authorization Manage Travel Voucher Manage Traveler Visibility	External	Provide Human Resources Profile Information	OVERPAYMENT PERSON PERSON-DEBT TRANSPORTATION-RESERVATION TRAVEL-AUTHORIZATION TRAVEL-AUTHORIZATION-FUNDED-EXPENSE TRAVEL-CASH-ADVANCE TRAVEL-CLAIM TRAVEL-DEMAND-ITEM TRAVEL-EXPENSE-PAYABLE TRAVEL-LOCATION TRAVEL-LOCATION-SEQUENCE	This is the auditable record of the details and related costs of a person's authorized travel.

Where Are Our People Located? (OV-7)

OV-7: Logical Data Model

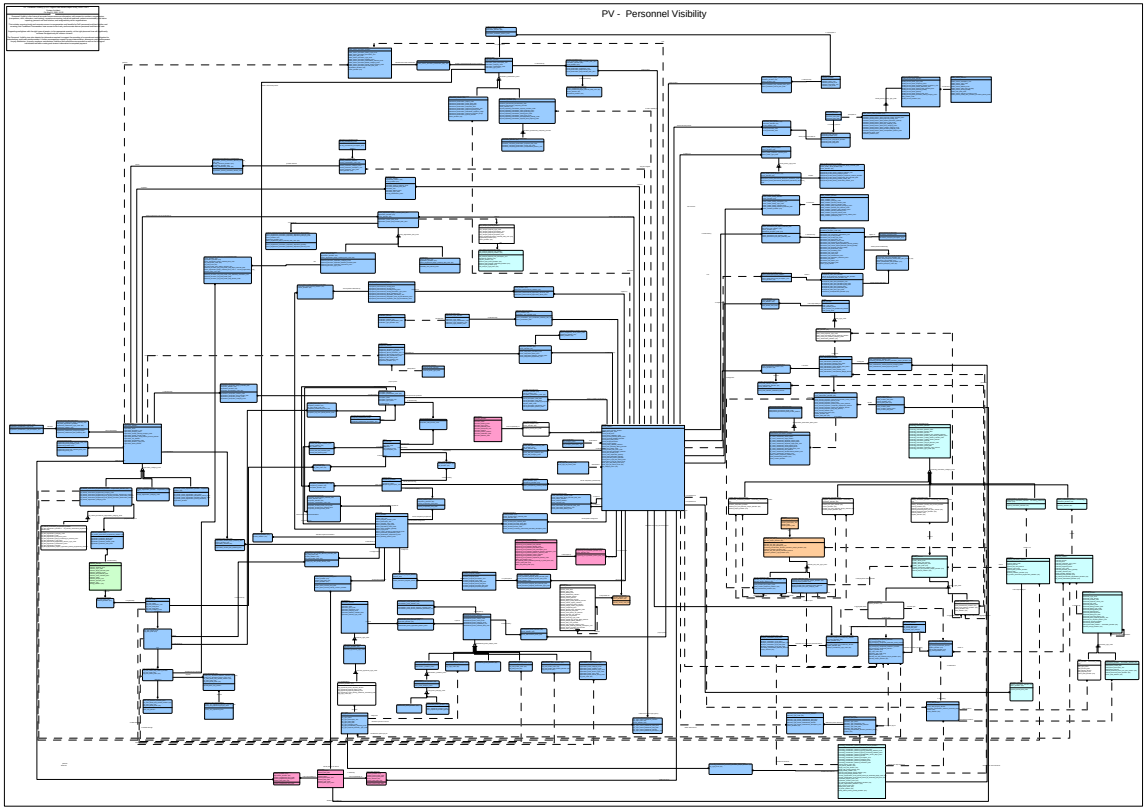

PERSON-TRAVEL-AUTHORIZATION
Travel_Authorization_Identifier (FK)
Person_Identifier (FK)

ASSIGNMENT
Assignment_Identifier

Assignment_Destination_Category_Code
Assignment_Duration_Type_Code
Assignment_Special_Instruction_Text
Assignment_Sponsorship_Provision_Code
Assignment_Duty_Specification_Code
Assignment_Succession_Code
Personnel_Order_Identifier (FK)
Organization_Identifier (FK)

PERSON-ASSIGNMENT
Assignment_Identifier (FK)
Person_Identifier (FK)

Person_Assignment_Condition_Code
Person_Assignment_Basis_Code
Person_Assignment_Effective_Calendar_Da
Person_Assignment_Explanation_Text

PERSON-ORGANIZATION
Person_Organization_Begin_Calendar_Date_Time
Organization_Identifier (FK)
Person_Identifier (FK)

Organization_Person_Role_Code
Organization_Person_End_Calendar_Date_Time

PERSON-POSITION
Position_Identifier (FK)
Person_Position_Begin_Calendar_Date
Person_Identifier (FK)

Person_Position_End_Calendar_Date
Person_Position_Projected_Start_Date
Person_Position_Projected_Stop_Date
Person_Position_Reason_Code
Person_Position_Continuing_Professional_Education_Exemption_C

PERSON-EVACUATION
Evacuation_Point_Identifier (FK)
Evacuation_Identifier (FK)
Person_Identifier (FK)

Person_Evacuation_Date
Person_Evacuation_Time

PERSON-ADMINISTRATIVE-EVENT
Administrative_Event_Identifier (FK)
Person_Identifier (FK)

Person_Administrative_Event_Date

LOCATION-PERSON
Location_Identifier (FK)
Location_Person_Role_Code
Location_Person_Start_Date
Person_Identifier (FK)
Location_Start_Date (FK)

Location_Person_Stop_Date

PERSON-ASSIGNMENT-TRAVEL-STATUS
Person_Assignment_Travel_Status_Code
Assignment_Identifier (FK)
Person_Identifier (FK)

Where Are Our People Located? (SV-1)

SV-1: System Interface Diagram

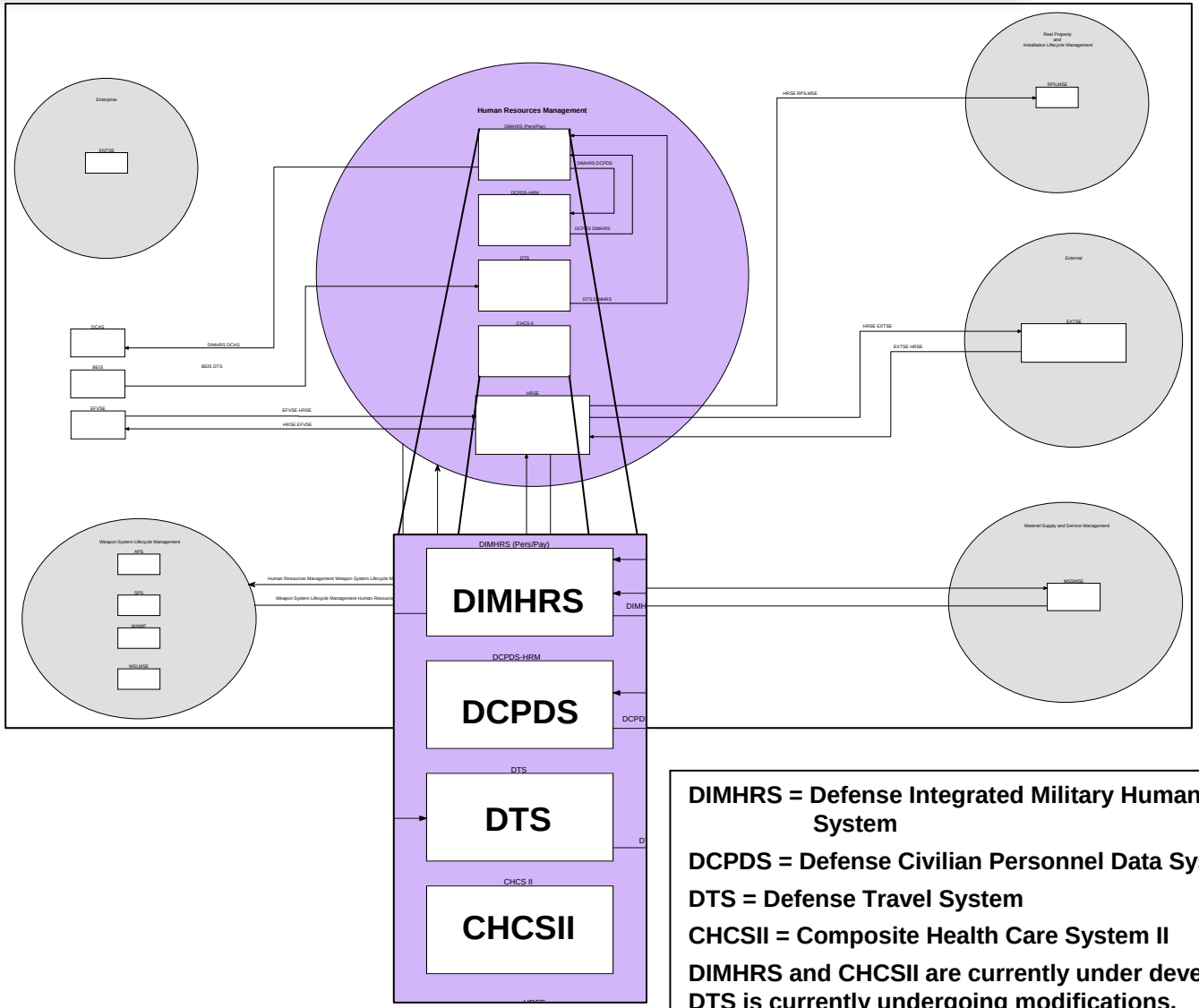

DIMHRS = Defense Integrated Military Human Resources System

DCPDS = Defense Civilian Personnel Data System

DTS = Defense Travel System

CHCSII = Composite Health Care System II

DIMHRS and CHCSII are currently under development. DTS is currently undergoing modifications.

Where Are Our People Located? (SV-5)

SV-5: Operational Activity/Systems Function Traceability Matrix

Operational Activity		BEP System Name		System Function
Develop Personnel		DIMHRS, DCPDS		Perform Personnel Development Management
Manage and Sustain Personnel		DIMHRS, DCPDS		Perform Personnel Management
Manage Law Enforcement		DIMHRS, DCPDS		Administer Law Enforcement Programs
Manage Military Health Services		CHCS II		Process Military Health Benefit
Manage Travel Authorization		DTS		Perform Travel Management
Manage Travel Resource Scheduling		DTS		Perform Travel Management
Manage Traveler Visibility		DTS		Perform Travel Management

Questions for the Enterprise

- **Who are our people?**
  - Who are our personnel (e.g., active, reserve, guard, civilian)?
  - What is the member's/employee's service/organization?
- **Where are our people located?**
  - How many members/employees are in theater?
  - How many members/employees are located in each duty status?
- **How can we effectively use our personnel?**
  - What are our people's skills?
  - What skill sets are we lacking?
  - How can we better acquire skills to match our needs?
- **How do we ensure our people's compensation?**
  - How many of our members are paid accurately and timely based on who they are, where they are and the member's skill sets?
  - Are financial commitments and obligations being generated at the appropriate point in the personnel/pay lifecycle?
  - What are the benefits/compensations to which the member/employee and their beneficiaries are entitled?
  - Is the member/employee and their beneficiaries receiving the benefits/compensation to which they are entitled?
  - What is the timeliness of pay change transactions based on effective date compared to the processing date of transactions?
  - What is the timeliness of pay change transactions based on the effective date compared to the end of month payday for transactions?
  - What is the timeliness of resolution of pay problems?

What Are Our People's Skills? (OV-6c)

OV-6c: Operational Event /Trace Description

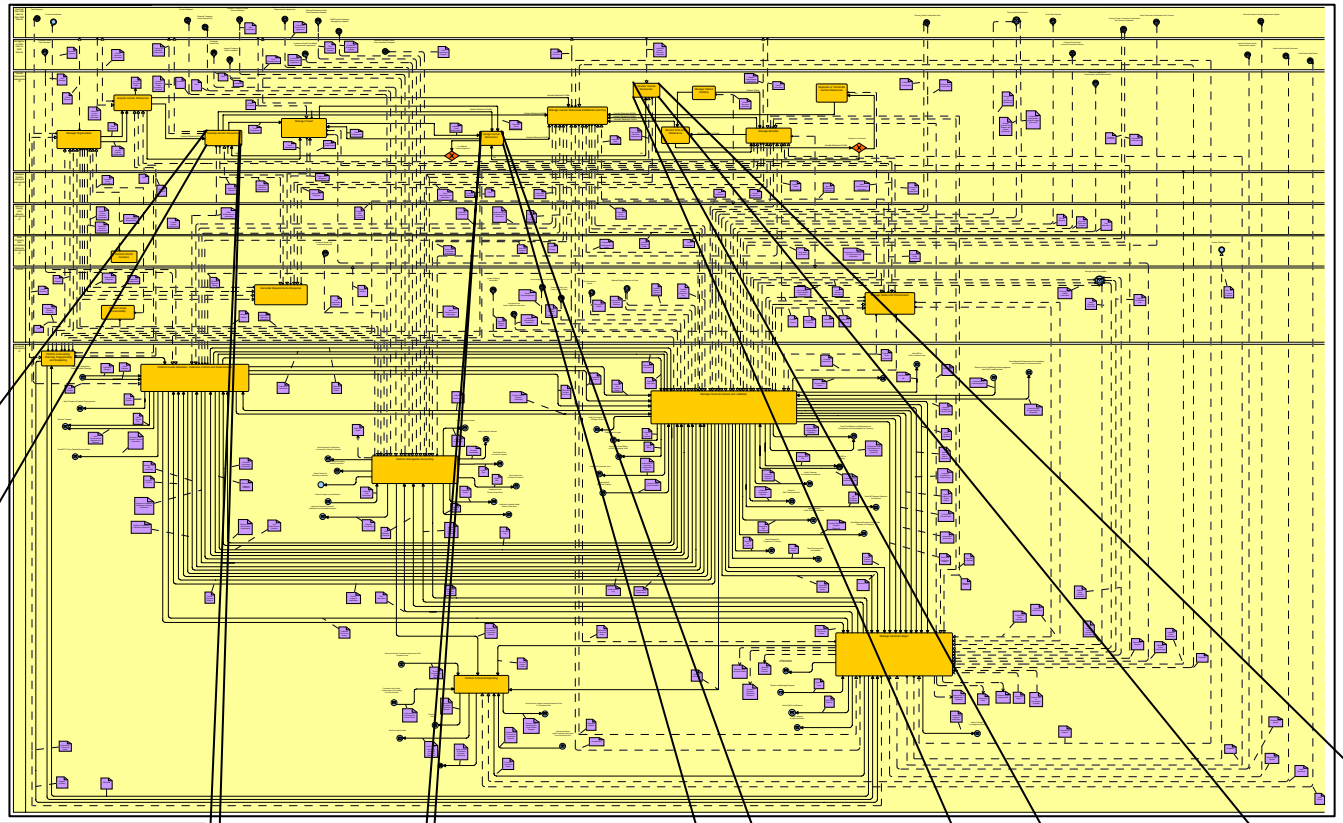

Develop Human Resources

Assign Human Resources

Sustain Human Resources

What Are Our People's Skills? (OV-5)

OV-5: Operational Activity Model

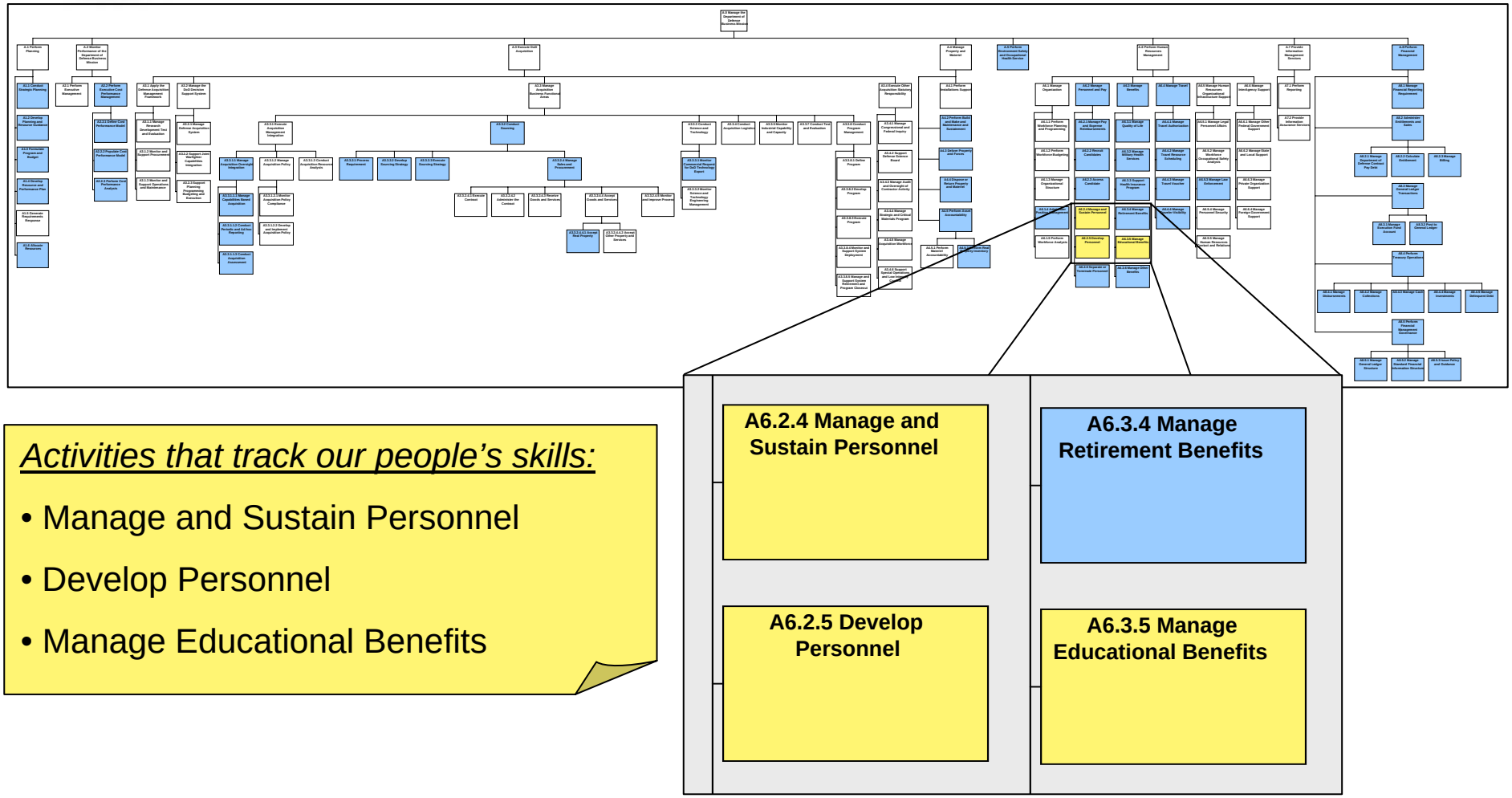

Activities that track our people's skills:

- Manage and Sustain Personnel
- Develop Personnel
- Manage Educational Benefits

What Are Our People's Skills? (OV-3)

OV-3: Operational Information Exchange Matrix

Need Line	Information Exchange	Information Exchange Description	Source Node	Source Activity	Destination Activity	Destination Node	Logical Data Entity
	Training and Education Requirement	This is a requirement that defines the need for a training and education program, goods, or services. It may be an unfunded or funded requirement.	HRM	Manage and Sustain Personnel Develop Personnel	Generate Requirements Response	WSLM	CONTRACT GUIDANCE DEVELOPMENT-PLAN-GOAL INSTRUCTIONAL-UNIT EDUCATIONAL-DISCIPLINE COMPETENCY CERTIFICATION CERTIFICATION-TYPE OCCUPATION SKILL
	Travel Requirement	This requirement defines an organization's or person's need for travel, including movement of goods, using the travel card (where authorized). It may be an unfunded or funded requirement.	HRM	Manage Military Health Services Access Candidate Recruit Candidates Separate or Terminate Personnel Develop Personnel Manage and Sustain Personnel	Generate Requirements Response	WSLM	TRAVEL-AUTHORIZATION CONTRACT GUIDANCE PERSON TRANSPORTATION-RESERVATION TRAVEL-LOCATION TRAVEL-LOCATION-SEQUENCE

What Are Our People's Skills? (OV-7)

OV-7: Logical Data Model

PERSON-SKILL

Person_Skill_Begin_Calendar_Date
Skill_Identifier (FK)
Person_Identifier (FK)

Person_Skill_End_Calendar_Date
Person_Skill_Category_Code

PERSON-INSTRUCTIONAL-UNIT

Person_Instructional_Unit_Begin_Calendar_Date
Instructional_Unit_Identifier (FK)
Person_Identifier (FK)
Educational_Discipline_Code (FK)

Person_Instructional_Unit_Reason_Code
Person_Instructional_Unit_End_Calendar_Date

PERSON-OCCUPATION

Occupation_Identifier (FK)
Person_Identifier (FK)
Occupation_Classification_Code (FK)

Person_Occupation_Start_Date
Person_Occupation_Stop_Date
Person_Occupation_Terminal_Occupational_
Program_Status_Code
Person_Occupation_Information_Text
Person_Occupation_Reason_Code

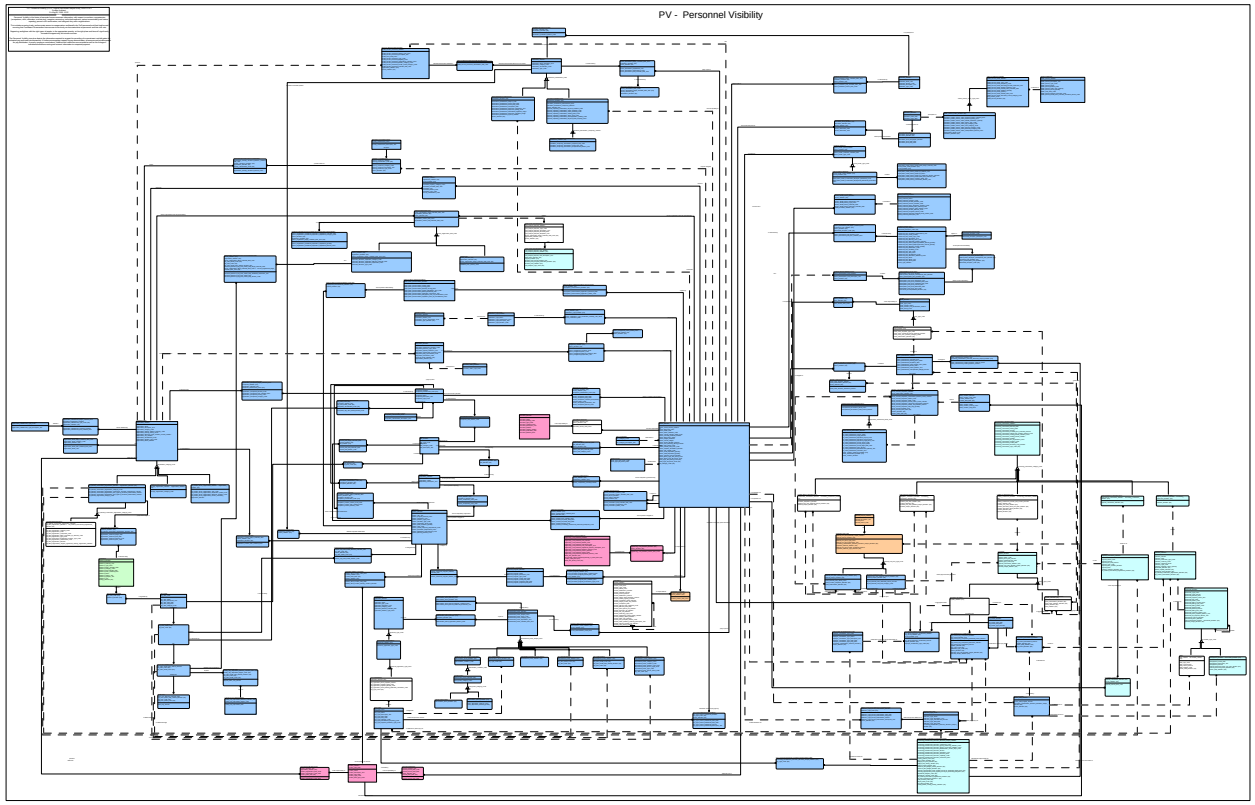

PERSON-EVALUATION

Person_Evaluation_Begin_Calendar_Date_Time
Evaluation_Identifier (FK)
Person_Identifier (FK)

Person_Evaluation_End_Calendar_Date_Time
Person_Evaluation_Person_Role_Code

PERSON-CERTIFICATION

Person_Identifier (FK)
Certification_Type_Identifier (FK)

Person_Certification_Type_Certification_Authority_Title_Name
Person_Certification_Date

PERSON-COMPETENCY

Person_Identifier (FK)
Competency_Identifier (FK)

Person_Competency_Verified_Indicator

What Are Our People's Skills? (SV-1)

SV-1: System Interface Diagram

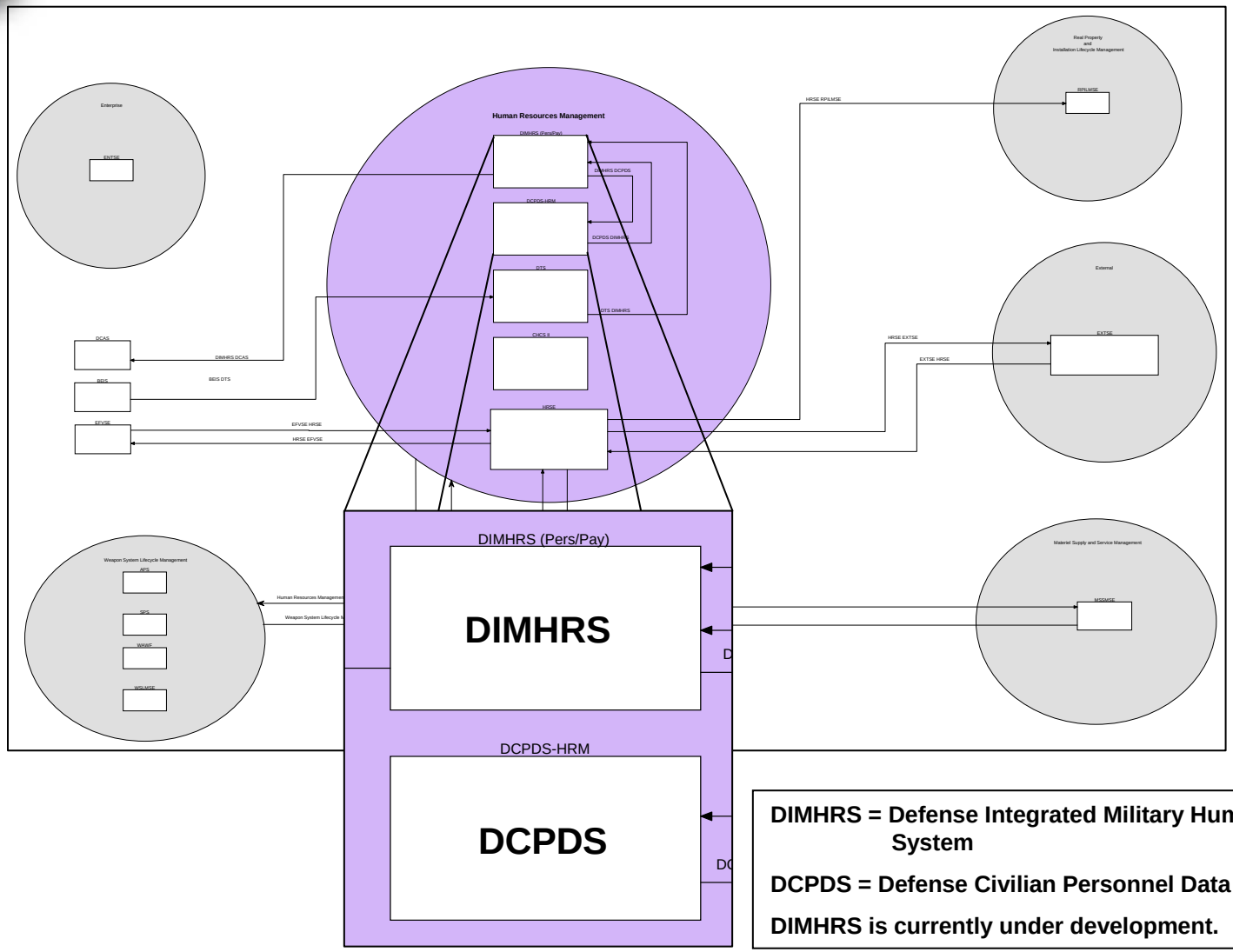

DIMHRS = Defense Integrated Military Human Resources System

DCPDS = Defense Civilian Personnel Data System

DIMHRS is currently under development.

What Are Our People's Skills? (SV-5)

SV-5: Operational Activity/Systems Function Traceability Matrix

Operational Activity	BEP System Name	System Function
Develop Personnel	DIMHRS, DCPDS	Perform Personnel Development Management
Manage and Sustain Personnel	DIMHRS, DCPDS	Perform Personnel Management
Manage Educational Benefits	DIMHRS, DCPDS	Perform Benefits Management

Questions for the Enterprise

- **Who are our people?**
  - Who are our personnel (e.g., active, reserve, guard, civilian)?
  - What is the member's/employee's service/organization?
- **Where are our people located?**
  - How many members/employees are in theater?
  - How many members/employees are located in each duty status?
- **How can we effectively use our personnel?**
  - What are our people's skills?
  - What skill sets are we lacking?
  - How can we better acquire skills to match our needs?
- **How do we ensure our people's compensation?**
  - How many of our members are paid accurately and timely based on who they are, where they are and the member's skill sets?
  - Are financial commitments and obligations being generated at the appropriate point in the personnel/pay lifecycle?
  - What are the benefits/compensations to which the member/employee and their beneficiaries are entitled?
  - Is the member/employee and their beneficiaries receiving the benefits/compensation to which they are entitled?
  - What is the timeliness of pay change transactions based on effective date compared to the processing date of transactions?
  - What is the timeliness of pay change transactions based on the effective date compared to the end of month payday for transactions?
  - What is the timeliness of resolution of pay problems?

How Do We Ensure Our People's Compensation? (OV-6c)

OV-6c: Operational Event /Trace Description

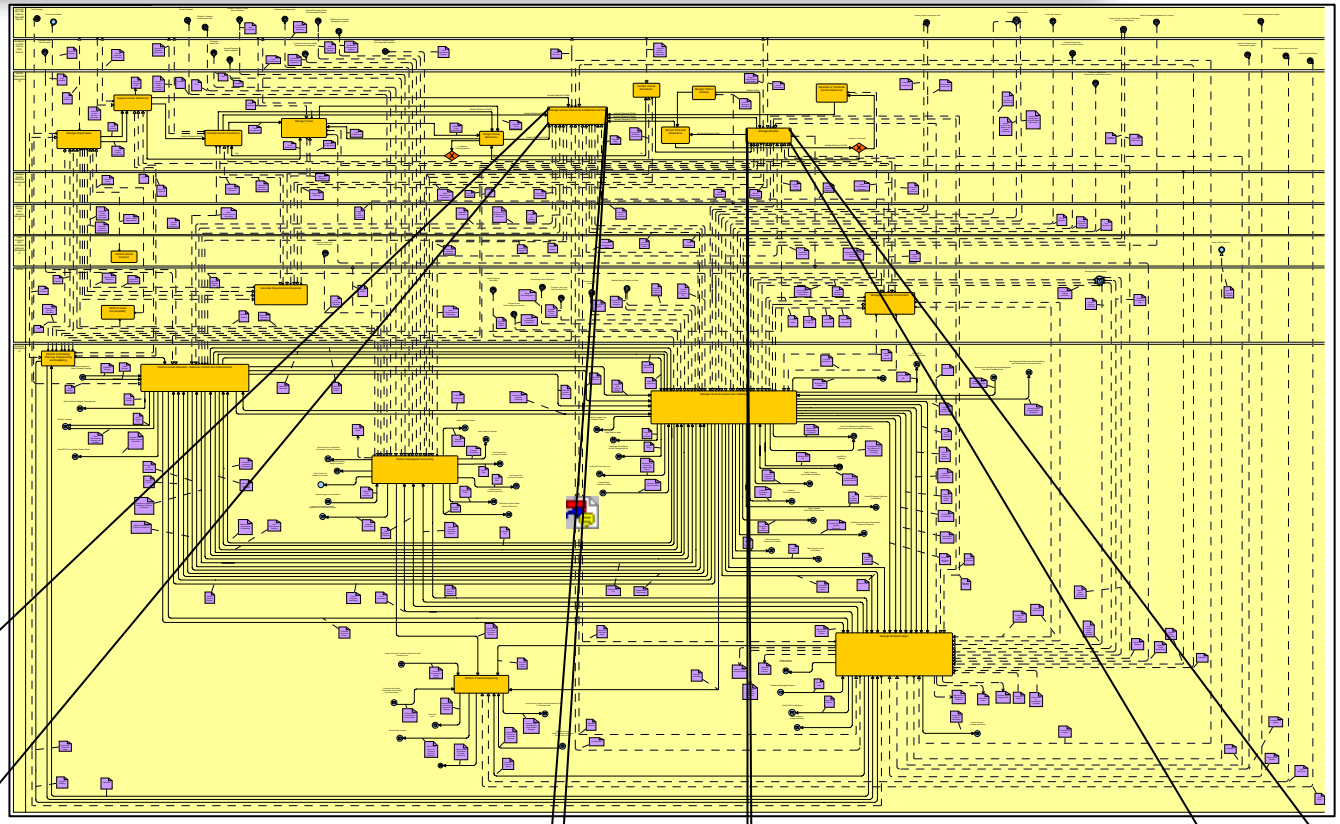

Manage Human Resources Entitlement and Pay

Manage Benefits

How Do We Ensure Our People's Compensation? (OV-5)

OV-5: Operational Activity Model

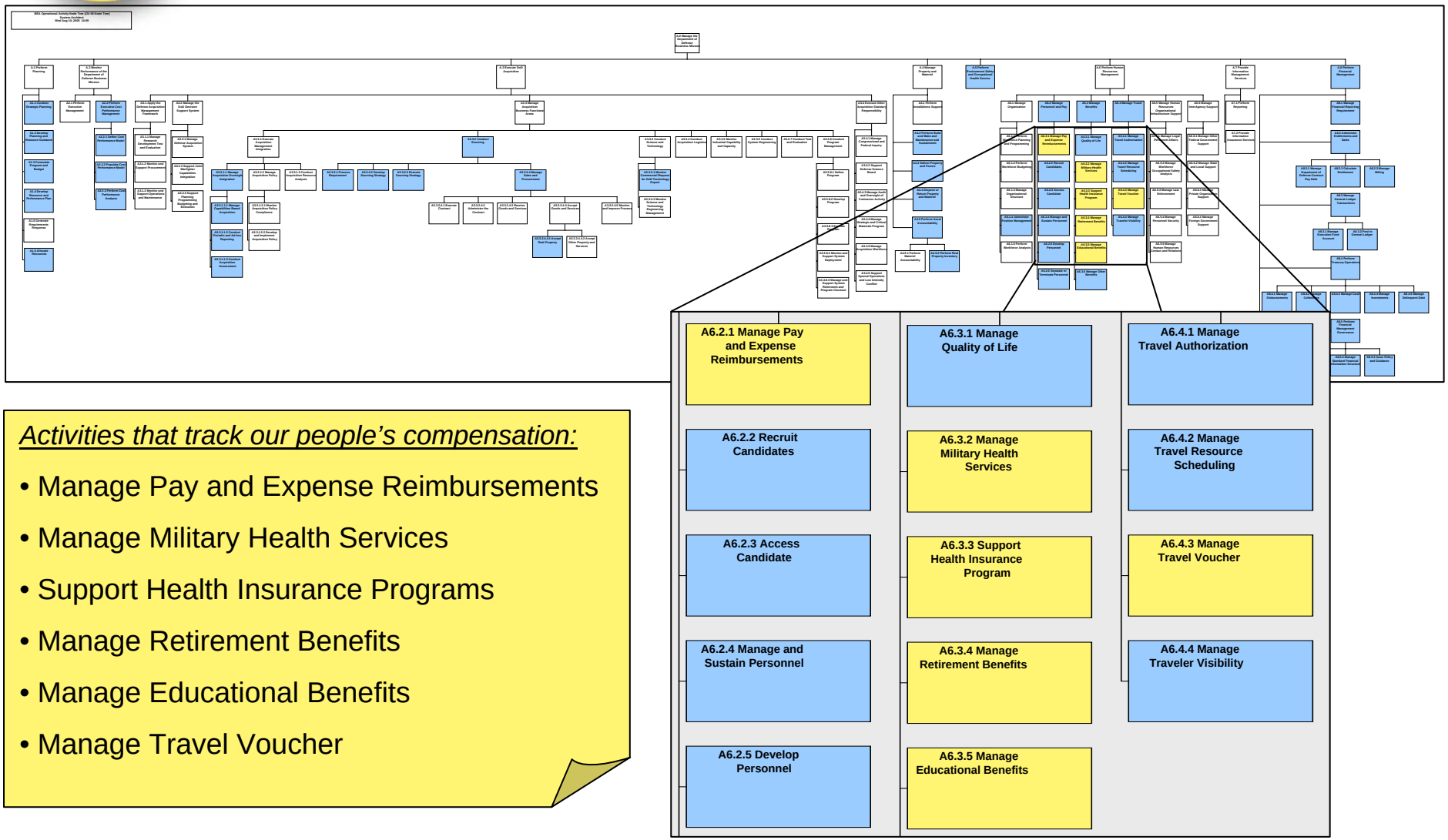

Activities that track our people's compensation:

- Manage Pay and Expense Reimbursements
- Manage Military Health Services
- Support Health Insurance Programs
- Manage Retirement Benefits
- Manage Educational Benefits
- Manage Travel Voucher

How Do We Ensure Our People's Compensation? (OV-3)

OV-3: Operational Information Exchange Matrix

Need Line	Information Exchange	Information Exchange Description	Source Node	Source Activity	Destination Activity	Destination Node	Logical Data Entity
HRM - WSLM	Benefit Requirement	This is a requirement that defines the need for a benefit program, goods, or services. It may be an unfunded or funded requirement.	HRM	Manage Quality of Life Support Health Insurance Program	Generate Requirements Response	WSLM	CONTRACT GUIDANCE
HRM - External	Benefit Administration Information	This is information required by external organizations such as Veterans Affairs (VA) or Office of Personnel Management (OPM) to control participation in programs supporting Department of Defense Human Resources.	HRM	Manage Other Benefits Manage Educational Benefits Manage Retirement Benefits Support Health Insurance Program Manage Military Health Services Manage Quality of Life Manage State and Local Support Manage Private Organization Support Manage Foreign Government Support Manage Other Federal Government Support	Process Veterans Administration Information Process Office of Personnel Management Information	External	ADMINISTRATIVE-EVENT ADMINISTRATIVE-EVENT-AGREEMENT ADMINISTRATIVE-EVENT-REASON CONTRACT CONTRACT-PERSON HEALTH-CONDITION LOCALITY-PAY-ADJUSTMENT OCCUPATION ORGANIZATION PAY-PLAN PAY-PLAN-GRADE PAY-PLAN-GRADE-STEP PERSON PERSON-HEALTH-HISTORY PERSONNEL-AGREEMENT PERSONNEL-RESOURCE
	Debt Correspondence	This is a variety of debt related correspondence going to external entities. Examples of documents include: dunning letters, responses to inquiries, responses to US bankruptcy court requests, schedule of payments.	HRM	Manage Military Health Services Manage Travel Voucher	Process Vendor or Customer Information	External	DEBT DEMAND DEMAND-LINE-ITEM DONATION-PLEDGE GRANT-REPAYMENT HEALTH-SERVICE-ENCOUNTER LOAN MISC-RECEIVABLE NOTIFICATION ORGANIZATION PAYABLE PAYABLE-ELEMENT-TYPE PAYABLE-TYPE PAYABLE-TYPE-PAYABLE-ELEMENT-TYPE PAYMENT-ORGANIZATION PAYMENT-PERSON PAYROLL-DEMAND-ITEM PERSON PERSON-DEBT PROCUREMENT-ACCRUAL-LINE-ITEM PROPERTY PROPERTY-ACTION PROPERTY-VALUE RECEIVABLE RECEIVABLE-COLLECTION-SCHEDULE SFIS-ASSET-TYPE US-FEDERAL-GOVERNMENT

How Do We Ensure Our People's Compensation? (OV-7)

OV-7: Logical Data Model

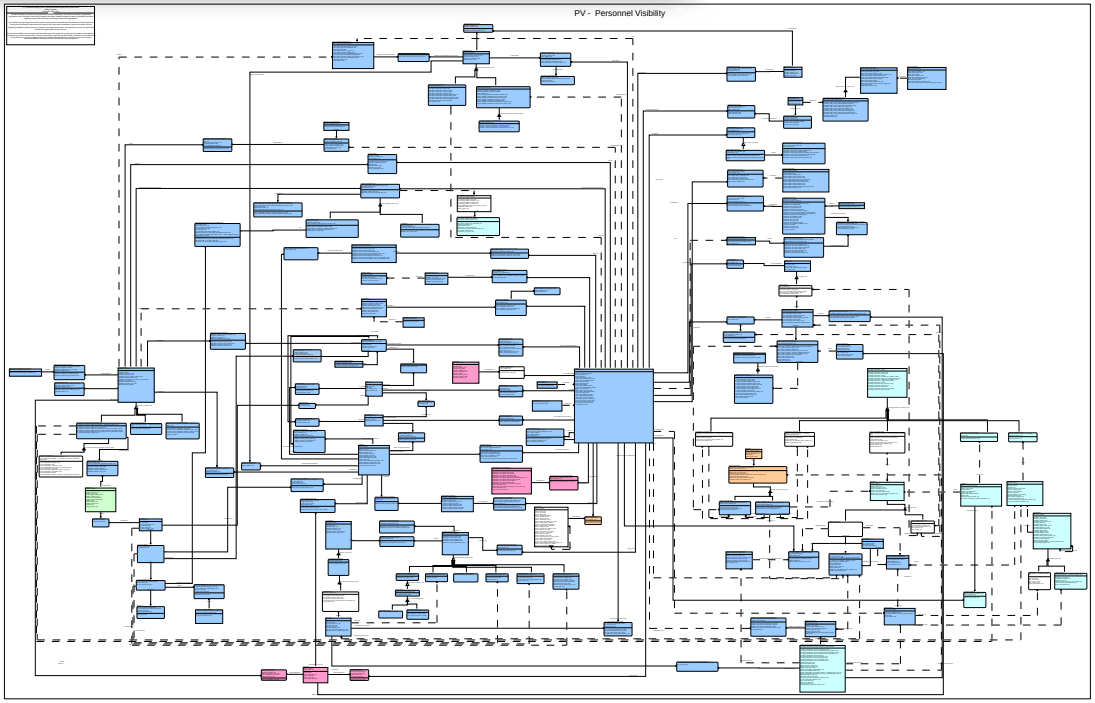

PAY-TYPE
Pay_Type_Code

Pay_Type_Name
Pay_Type_Description_Text
Pay_Type_Start_Date
Pay_Type_Stop_Date
Pay_Type_Category_Code
Pay_Type_Performance_Reporting_Code
Pay_Type_Payment_Schedule_Type_Code

PAY-TYPE-EVENT
Administrative_Event_Identifier (F

Pay_Type_Code (FK)

PAY-PLAN
Pay_Plan_Code

Pay_Plan_Name
Pay_Plan_Description_Text
Pay_Plan_Start_Date
Pay_Plan_Stop_Date
Pay_Plan_Category_Code

PAY-PERIOD
Pay_Period_Identifier

Pay_Period_Start_Date
Pay_Period_End_Date
Pay_Period_Type_Indicator

OCCUPATION-PAY-PLAN-GRADE
Pay_Plan_Code (FK)
Occupation_Identifier (FK)
Pay_Plan_Grade_Code (FK)
Occupation_Classification_Code (FK)

Occupation_Pay_Plan_Grade_Reason_Code

PAY-GRADE-EVENT
Administrative_Event_Identifier (FK)

Pay_Plan_Grade_Code (FK)
Pay_Plan_Code (FK)

ADJUSTED-BASIC-PAY
Locality_Pay_Adjustment_Effective_Calendar_Date (FK)
Locality_Pay_Adjustment_Region_Code (FK)
Pay_Plan_Grade_Step_Ordinal_Identifier (FK)
Pay_Plan_Code (FK)
Pay_Plan_Grade_Code (FK)

Adjusted_Basic_Pay_Amount

LOCALITY-PAY-ADJUSTMENT
Locality_Pay_Adjustment_Effective_Calendar_Date
Locality_Pay_Adjustment_Region_Code

Locality_Pay_Adjustment_Rate

PAY-PLAN-GRADE-STEP
Pay_Plan_Grade_Step_Ordinal_Identifier
Pay_Plan_Code (FK)
Pay_Plan_Grade_Code (FK)

PAY-STEP-EVENT
Administrative_Event_Identifier (FK)

Pay_Plan_Grade_Code (FK)
Pay_Plan_Grade_Step_Ordinal_Identifier (FK)
Pay_Plan_Code (FK)

How Do We Ensure Our People's Compensation? (SV-1)

SV-1: System Interface Diagram

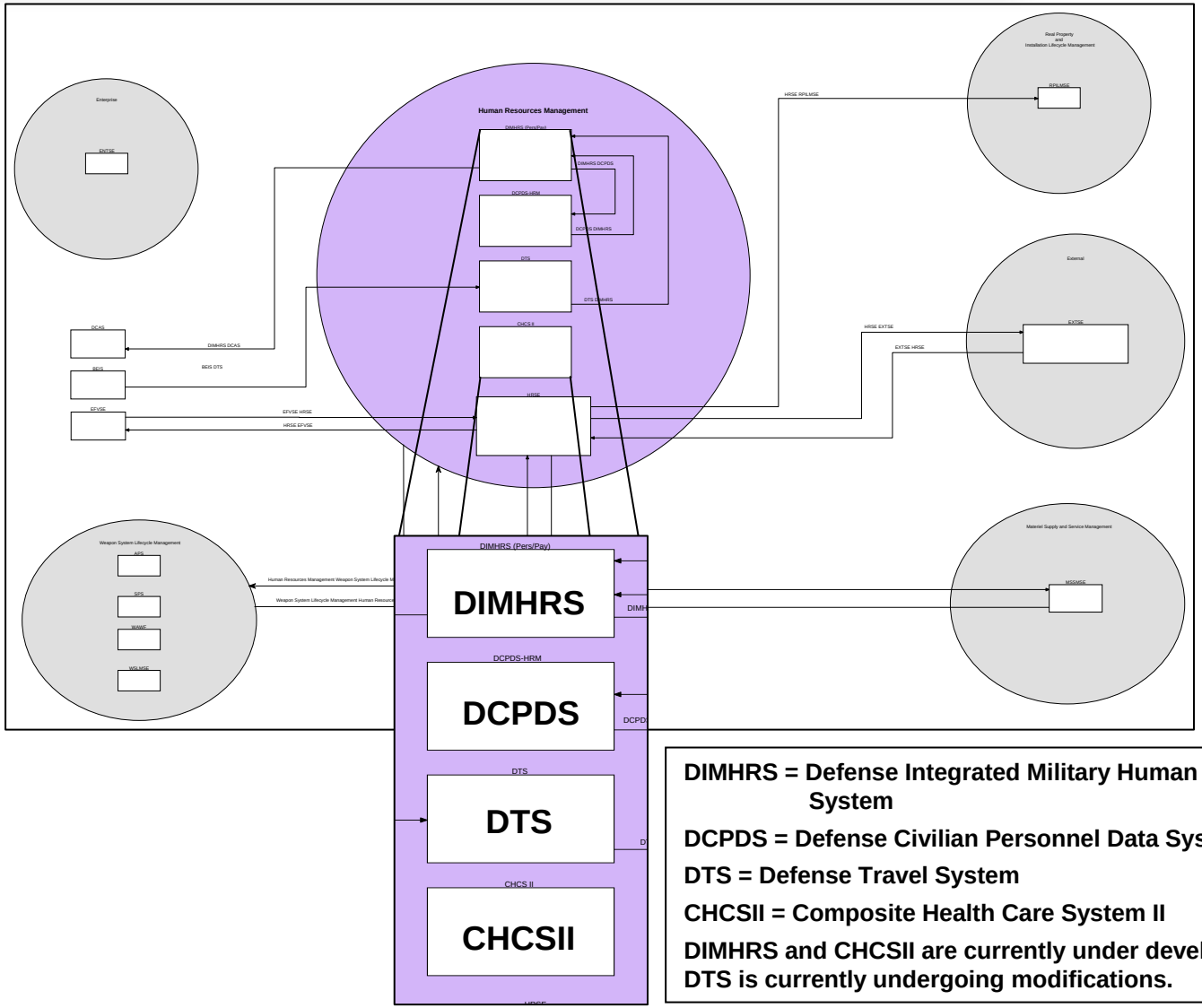

DIMHRS = Defense Integrated Military Human Resources System

DCPDS = Defense Civilian Personnel Data System

DTS = Defense Travel System

CHCSII = Composite Health Care System II

DIMHRS and CHCSII are currently under development. DTS is currently undergoing modifications.

How Do We Ensure Our People's Compensation? (SV-5)

SV-5: Operational Activity/Systems Function Traceability Matrix

Operational Activity	BEP System Name	System Function
Manage Educational Benefits	DIMHRS, DCPDS	Perform Benefits Management
Manage Military Health Services	CHCSII	Perform Benefits Management
Manage Pay and Expense Reimbursements	DIMHRS	Administer Payroll and Reimbursements
Manage Retirement Benefits	DIMHRS, DCPDS	Perform Benefits Management
Manage Traveler Voucher	DTS	Perform Travel Management
Support Health Insurance Program	DCPDS	Perform Benefits Management

Personnel Visibility Thread Impact on HRM CBMA

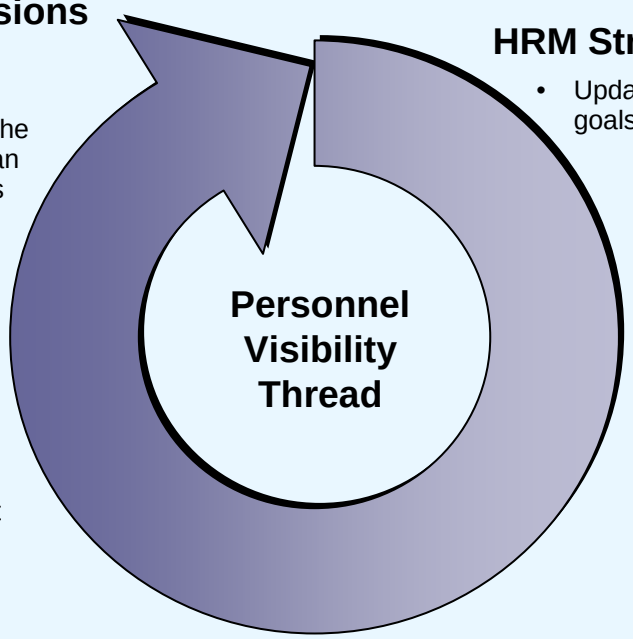

Governance Decisions

- Vet investments within governance structure
- Ensure alignment with the HRM CBA Strategic Plan and Enterprise priorities

HRM Strategic Planning

- Update mission, vision, goals, and objectives

HRM EA

- Support capabilities
- Design process, data, and system environments to deliver capabilities

HRM Transition Planning

- Evaluate processes, data, and systems to identify gaps and redundancies
- Sequence system investments and migrations

HRM Certification

- Evaluate current and proposed systems against the IRB criteria
- Evaluate investment candidates

Enterprise Architecture as a Transformation Enabler

- Personnel Visibility Thread
  - Reviews have not identified any gaps in BEA 3.0 PV high level function depictions
  - Interactions with other Core Business Mission Areas are ongoing
  - Sufficient clarity has been achieved to support current certification process

Moving Forward

- Refining the enterprise information interactions with HRM to get the best synergy between all segments of the Department's business
- Continuing to develop the architecture, analyze capabilities, and research business best practices to enable transformation

Questions

- DoD Human Resources Management

Questions: Marty Mitchell

(703) 696-8185

marty.mitchell@osd.pentagon.mil

Questions: Rod Eslinger

(703) 608-6874

rod.eslinger.ctr@osd.pentagon.mil

Back-Up

Enterprise Architecture as a Transformation Enabler

- Comprehensive Enterprise Architecture products:
  - Promote transition by streamlining business processes, standardizing data, and categorizing capabilities
  - Identify capabilities-related gaps and redundancies
  - Create foundation for investment management and control decisions
  - Enable visibility of the enterprise systems impact