RESTRICTED DATA
Atomic Energy Act of 1954

REPORT 2-122

STRAT-X

In 20 Volumes

Volume 4

DESIGN-LAND MOBILE SYSTEM (U)

DDC

INSTITUTE FOR DEFENSE ANALYSES
RESEARCH AND ENGINEERING SUPPORT DIVISI
400 Army-Navy Drive, Arlington, Virginia 22202

August 1967

EXCLUDED FROM AUTOMATIC REGRADING; DOD DIR 5200.10 DOES NOT APPLY

Log No. IDA/HQ 67-5896
Copy of 125

SECRET
RESTRICTED DATA
Atomic Energy Act of 1954

DDC CONTROL
EL 74503

59

6

unclas

DOCUMENT CONTROL DATA - R & D

Institute for Defense Analyses	SECRET-Restricted Data 1

Design — Land Mobile System (U), STRAT-X, Volume 4

Report R-122, Volume 4 August 1967

James Drake

August 1967	116	24
DAHC15 67 C 00 11 Task T-56	R-122 NA	

A distribution statement for this volume is not required per ARPA/TIO.

NA	NA

The basing concept for an ICBM in a Land Mobile transporter-launcher is described. Both a detail functional and physical description are presented along with the operational tests required and design costs and schedules. Also discussed are the technical risks involved from both the operational and development point of view. (U)

DD FORM 1473

UNCLASSIFIED
Security Classification

SECRET
RESTRICTED DATA
Atomic Energy Act of 1954

Unclas

REPORT R-122

STRAT-X

In 20 Volumes

Volume 4

DESIGN-LAND MOBILE SYSTEM (U)

August 1967

IDA

INSTITUTE FOR DEFENSE ANALYSES
RESEARCH AND ENGINEERING SUPPORT DIVISION
400 Army-Navy Drive, Arlington, Virginia 22202

Contract DAHC15 67 C 0011
Task T-56

DDC CONTROL
NO. 71503

SECRET
RESTRICTED DATA
Atomic Energy Act of 1954

Unclas

FOREWORD TO THE STRAT-X REPORTS

The STRAT-X Study was performed by the Research and Engineering Support Division of IDA in response to ARPA Contract DAHC-15-67-C-0011 Task Order T-56. Many individuals, government agencies and industrial organizations furnished information which was used in preparation of the STRAT-X reports, but the responsibility for the contents is taken by the individuals shown below.

Gen. Maxwell D. Taylor - President, IDA

- Dr. Ali B. Cambel - Director, RESD Division of IDA
  - Dr. Robert H. Fox - Deputy Director, RESD Division of IDA
  - Mr. Fred A. Payne - Director, STRAT-X Study
    - Mr. Dewey Rinehart - Chairman, Design Panel
      - Mr. Phil De Protine - Active Defense System
      - Mr. Donald D. Cox - Silo System
      - Mr. James R. Drake - Land Mobile System
      - Dr. Willy A. Fiedler - Submarine System
      - Mr. LeRoy E. Harris - Ship System
      - Mr. Lloyd E. Munson - Booster Design
      - Mr. Maurice F. Dunn - Payload Design
      - Mr. Howard Trudeau - Payload Design
      - Mr. George Gordon - Guidance & Navigation
      - Lt. Cdr. Paul Cummins - Systems Analyses
    - Mr. Clifford Cummings - Chairman, Reactions Panel
      - Dr. David Kahn - Unconventional Reactions
      - Mr. Kenneth Whitt - Sea-Based Reactions
      - Dr. J. Christopher Nolen - Active Defense Reactions
      - Dr. William Schultis - Land-Based Reactions
    - Dr. Irving Yabroff - Chairman, Evaluation Panel
      - Mr. Jason W. Capps - Deputy Chairman, Evaluation Panel
      - Dr. Ralph Pennington (Col. USAF) - System Analysis
      - Mr. Wayne M. Allen - Cost
      - Mr. Willard W. Perry - Payload Analysis
      - Dr. Benjamin Sussholz - Nuclear Effects

UNCLAS

The STRAT-X reports are submitted in 20 volumes listed below.

Volume	Title
1	The STRAT-X Report
2	Design-Active Defense System
3	Design-Rock Silo System
4	Design-Land Mobile System
5	Design-Ship Based System
6	Design-New Submarine System
7	Design-Boosters
8	Design-Payloads
9	Design-Guidance and Navigation
10	Reaction-Fixed Undefended Systems
11	Reaction-Fixed Defended Systems
12	Reaction-Land Mobile System
13	Reaction-Ship Based System
14	Reaction-New Submarine System
15	Reaction-Unconventional Warfare
16	Reaction-USSR Strategy
17	Systems Analysis
18	Nuclear Effects
19	Costs
20	Payloads Evaluation

UNCLAS

FOREWORD TO VOLUME 4

This Volume, "Design--Land Mobile System", was prepared under the direction of Mr. J. Drake. Periodic program reviews and report critiques were conducted by an advisory group made up of the following members:

Mr. Daniel Etter - IDA/WSED

Mr. Alfred Jones - IDA/RESD

Mr. E. Martinelli - The RAND Corporation

Mrs. Deane Oberste-Lehn - The RAND Corporation

Mr. Alan Pope - The Sandia Corporation

Mr. Boyd L. Rasmussen - Bureau of Land Management, Department of the Interior

Mr. Robert B. Wheelock - Hughes Aircraft Corporation, Manager, Project Engineering

Mr. D.B. Wilson - The RAND Corporation

Major Gen. W.W. Wisman - Deputy Director for NMCS, Joint Chiefs of Staff

Mr. Ernie Witt - Martin-Marietta Pershing Program

Further Technological and Engineering support was given by principal Contractors as follows:

Ralph M. Parsons Company - Facility systems engineering

Martin Company - Transporter launcher design, and system synthesis

The appendices referred to in the body of this report are not published here but are on file at the Institute for Defense Analyses.

UNCLAS

CONTENTS

I. Introduction. 1

II. General Description 3

A. Land Mobile System Concept. 3

B. Airborne Vehicle. 11

C. Command and Control 14

III. Detailed Physical Description 19

A. Basing. 19

B. Airborne Vehicle. 29

C. Command and Control 45

D. Support Systems 51

E. Personnel Requirements. 59

F. Security. 61

IV. Functional Description. 63

A. Concept of Operation. 63

B. Reliability 67

C. Operational Flow Diagrams 68

V. Operational Tests 81

A. Standard Tests. 81

B. Hardness Qualifications 82

VI. Cost and Schedules. 85

A. System Costs. 85

B. Development Schedule. 89

VII. Technical Risks and Technology Programs 91

A. Technical Risk Areas. 91

B. Operational Risk Areas. 98

UNCLAS

VIII. Alternate Throw Weight Booster 105
IX. System Features 111
X. Bibliography. 115

UNCLAS

I. INTRODUCTION

This report presents a preliminary definition and description for the STRAT-X Study of a Land Mobile System, which is an intercontinental ballistic missile system mounted on a large rubber-tired, self-propelled transporter-launcher capable of sustained operation in the moderately smooth countryside typical of the western part of the United States. The objective of the mobility is to deny the enemy exact knowledge of his targets' locations, forcing him to use area bombardment to destroy the system.

In the absence of any reconnaissance or intelligence information, the enemy would either have to blanket the entire deployment area with a prohibitively large number of nuclear weapons, or else rely on anti-ballistic missile defense. If he chose, for example, to cover only half of the deployment area, with a lethal overpressure, he could expect to kill only one half of the missiles deployed therein. With reconnaissance information, however, the area which he must target is reduced and becomes, specifically, the area into which the individual transporter-launchers can be expected to move in the interval, known as the Intelligence Cycle Time (ICT), between his last observation and the arrival time of his attacking warhead.

Studies have shown that between [redacted] of [redacted] ground are available in the western United States. Other studies show that the transporter-launchers can be hardened to [redacted] Accordingly, in the absence of reconnaissance data ("infinite ICT"), the Land Mobile System is highly survivable and very cost-effective indeed. If the enemy has sufficient resolve to deploy a satellite reconnaissance and relay system and to devise

a means for redirecting his missiles in flight, he can conceivably reduce the ICT to below his 30-min missile flight time, with a corresponding drastic reduction in the area he must bombard. It then becomes a matter of a tradeoff between his costs of deploying such a reconnaissance system and the U.S. costs of deploying the Land Mobile System. The STRAT-X Reaction Panel has postulated a reconnaissance system with a 6 min total ICT at a cost of $3 billion and the Land Mobile System effectiveness analyses have been based on this postulation.

The currently proposed system, although capable of full off-road operation, will normally operate on a closely spaced grid of "pioneer" roads. This concept has been evolved from the past and current studies mainly to maximize the transporter-launcher speed capability. The latter is required to counter short enemy ICT's.

The STRAT-X ground rule for all candidate systems calls for a force size providing three million lb of installed throw weight. In the case of the Land Mobile System, missiles with throw weights ranging from 2000 to 14,000 lb have been considered requiring from 1500 to 224 fielded units to provide the required throw weight. Early studies indicated that the very large missiles required excessively large transporters, so that intention was focused on two sizes: [redacted] lb and [redacted]

No clear-cut decision has been reached as to the choice between the [redacted] lb and the [redacted] lb throw weight missile. Since there are advantages and disadvantages to either choice, both are presented. The main body of the report is written around the [redacted] lb throw weight missile size. The description and data for the [redacted] lb throw weight missile are given in Section VIII.

Unclas

II. GENERAL DESCRIPTION

This section describes the operational concept of the Land Mobile System and includes a brief summary of the following:

A. Land Mobile System Concept

B. Airborne Vehicle

C. Command and Control

A. LAND MOBILE SYSTEM CONCEPT

1. General

The Land Mobile System concept and a summary of its principal characteristics are shown in Fig. 1. The Land Mobile System operational unit consists of a mobile self-contained hardened transporter-launcher carrying one missile with associated erector, supporting aerospace ground equipment, communications and command and control gear, together with crew accommodations for extended operation away from base. Crew changes and provisions resupply are accomplished in the field. Refueling will take place at the squadron or a remote fuel tank during pre-attack conditions or fuel caches during the post-attack period. Although entirely capable of full off-road operation, the transporter-launchers will normally operate on a grid of minimum-cost "pioneer" type roads mainly to maximize the speed capability. The nominal grid spacing is and the deployment area for each transporter-launcher is between sq mi.

The Land Mobile System will be organized in squadrons of 50 transporter-launchers each. All the transporter-launchers have the same basic configuration, however, five of the 50 in each squadron include the necessary equipment and personnel to perform the command

SECRET

Unclas

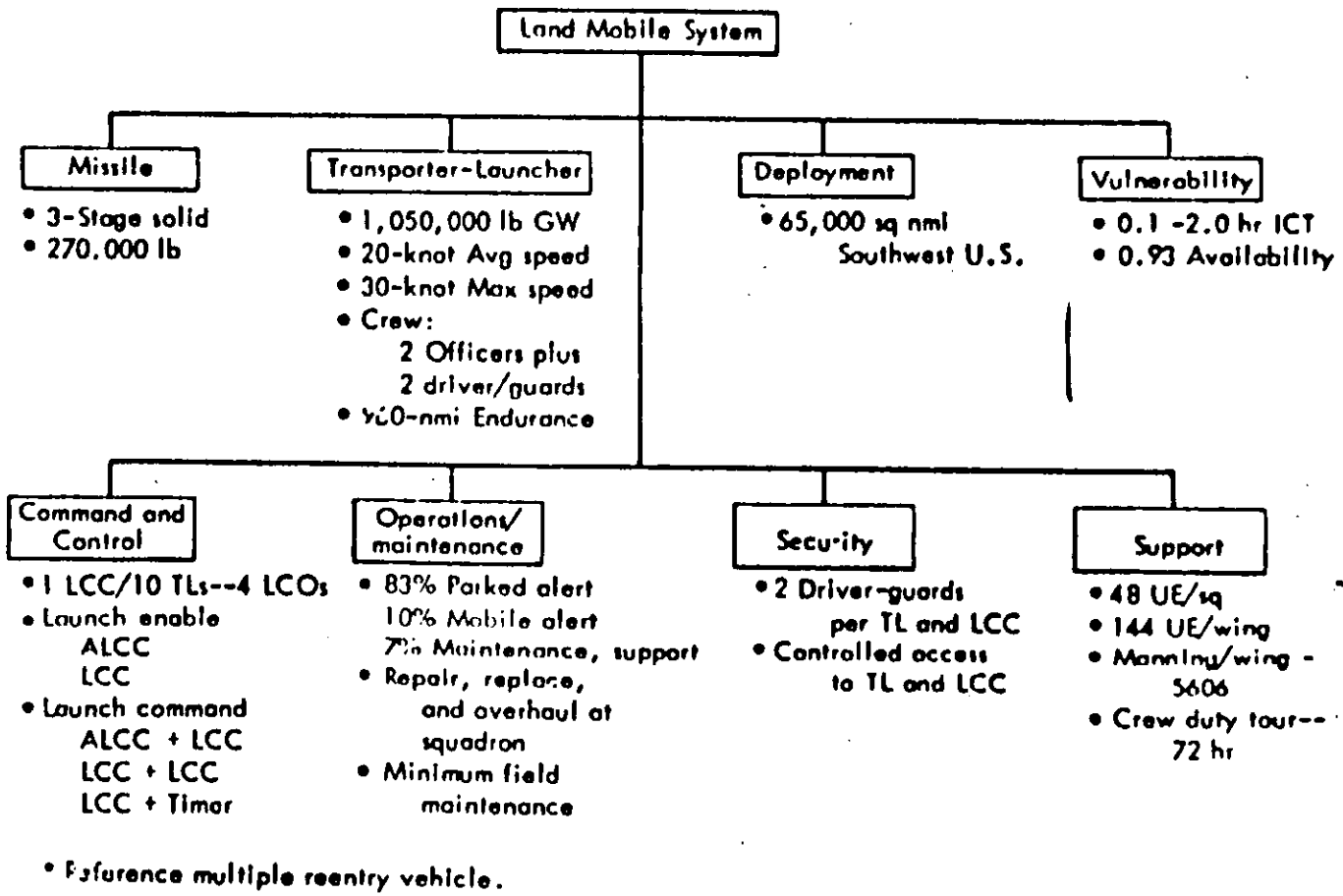

• Reference multiple reentry vehicle.

FIGURE 1. Land Mobile System--System Characteristics)

SECRET

Unclas

and control function. (These transporter-launchers will be referred to as launch control centers (LCC/TL).) All 50 transporter-launchers will have the physical space and built-in racks, cabling, etc., for the command and control function but only those performing the launch control center function will carry the necessary personnel and equipment.

2. Deployment Area*

The current estimate of available deployment areas ranges from 65,000 to 101,000 sq nmi for the Land Mobile (Random) System. The large differential is due to incomplete evaluation of some land categories added later in the study and of some potential land use problems. Figure 2 shows the proposed area of deployment with a tentative criteria for selection; the evaluated usable deployment area within each state boundary plus possible additions and deletions are presented in Table 1. The types of surface ground material found in the available deployment areas are predominantly sandy soils which in general offer good transporter-launcher support and traction. Further investigations that will be required, to determine the true extent of the available deployment area, are public domain lands under lease, claim or permit; presence of man-made obstacles (roads, power lines, pipelines, etc.); land damage regarding soil erosion, vegetation, watershed and water quality; compatibility of land use; legal negotiations; and public reaction. (It is questionable whether this last item is amenable to analysis.)

3. Mobility Fraction

The mobility fraction (MF) is the fraction of the time spent by each transporter-launcher or LCC/TL in motion at some average velocity, $\bar{V}$. The shorter the enemy's intelligence cycle time, as defined in Section I above, the higher the product MF x $\bar{V}$ must be to achieve a given survivability.

* Appendix 2, Deployment Criteria and Evaluation for Land Mobile Advanced Missile Systems, deals comprehensively with the question of land availability and includes information and analyses developed specially for STRAT-X by the Bureau of Land Management, Department of the Interior.

UNCLAS

SECRET

[redacted]

GROUND RULES FOR LAND SELECTION

SUBJECT	CRITERIA
[redacted]	

FIGURE 2 Proposed Deployment Area

Unclas

SECRET

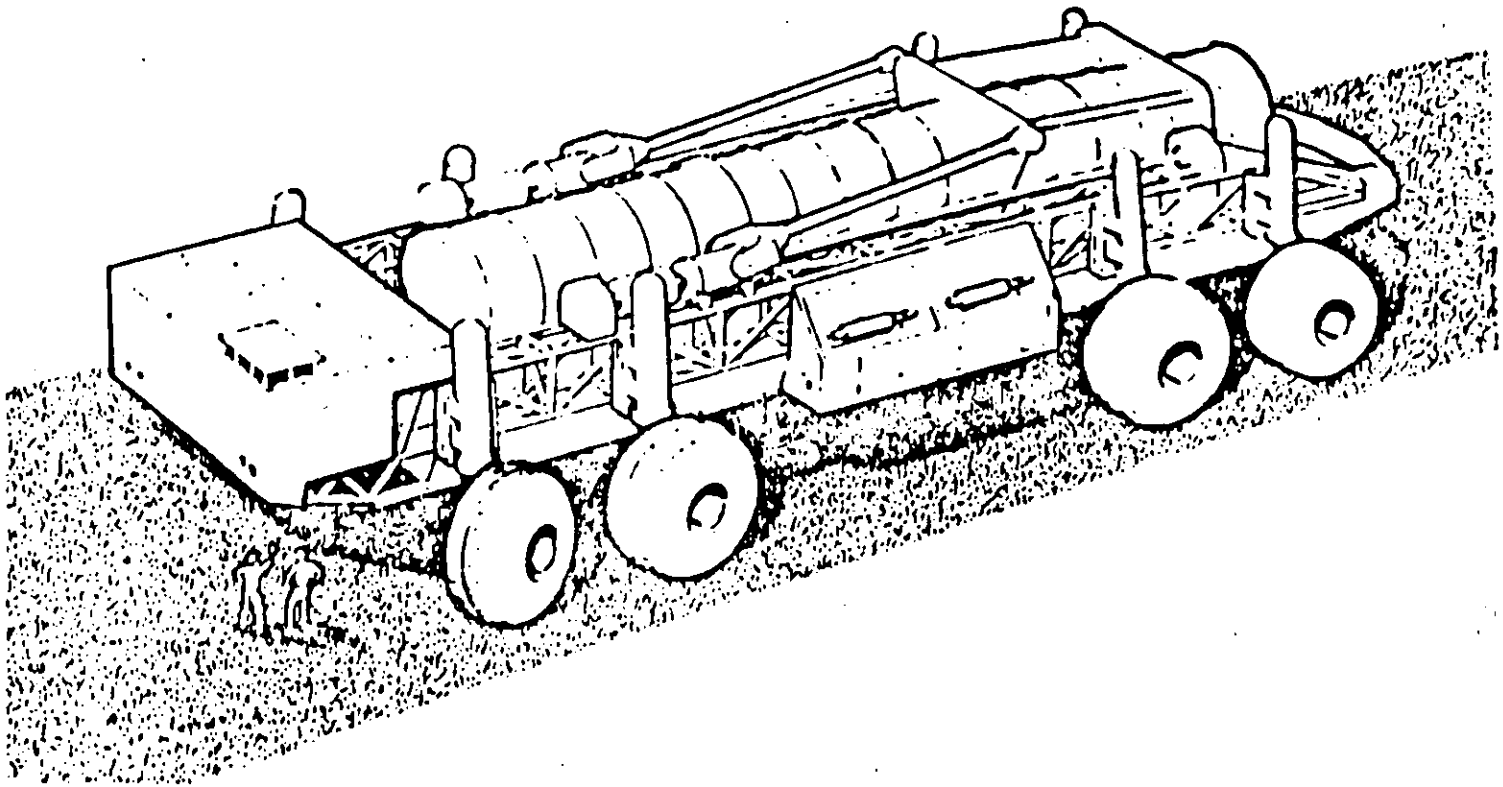

FIGURE 3 Transporter-Launcher

unclas

The proposed Land Mobile System operating concept, which is described in detail in Section III-A, assumes an enemy intelligence cycle time of 0.1 hour offset by a U.S. early warning system capable of providing a reliable advance warning of at least 15 min of an impending missile attack. Under these conditions, the system will employ a nominal mobility fraction of about 10 percent, primarily to keep the system exercised. On receipt of an early warning signal, however, or on loss of a continuously broadcast "early warning safe" signal, all transporter-launchers will immediately enter a "dash" mode at maximum speed. Since this condition should occur only infrequently, the value of MF = 0.1 is assumed for estimating operating costs, failure rates, unavailability, etc., whereas a value of 0.93 (equal to availability) is assumed for calculating survivability.

4. Transporter-Launcher

The transporter-launcher for the [redacted] lb payload missile is shown in Fig. 3. It is approximately 106 ft long, 35 ft wide, and 23 ft high, with a gross weight of 1,010,000 lb. The maximum vehicle speed over level terrain is 30 knots and the average speed is approximately 20 knots. When fully fueled, the transporter-launcher carries enough fuel to travel approximately 1000 nmi along with the self-sustained operation of on-board power for 20 days. The transporter-launcher, under normal circumstances, will be refueled at ten-day intervals. An eject launch technique is used.

5. Vulnerability

The anticipated attack consists of nuclear weapons delivered by ballistic missiles. The weapon effects considered are [redacted] The most probable kill mechanism against the transporter-launcher is that resulting from [redacted]

SECRET

552(b)(1)

withheld page 27

unclas

unclas

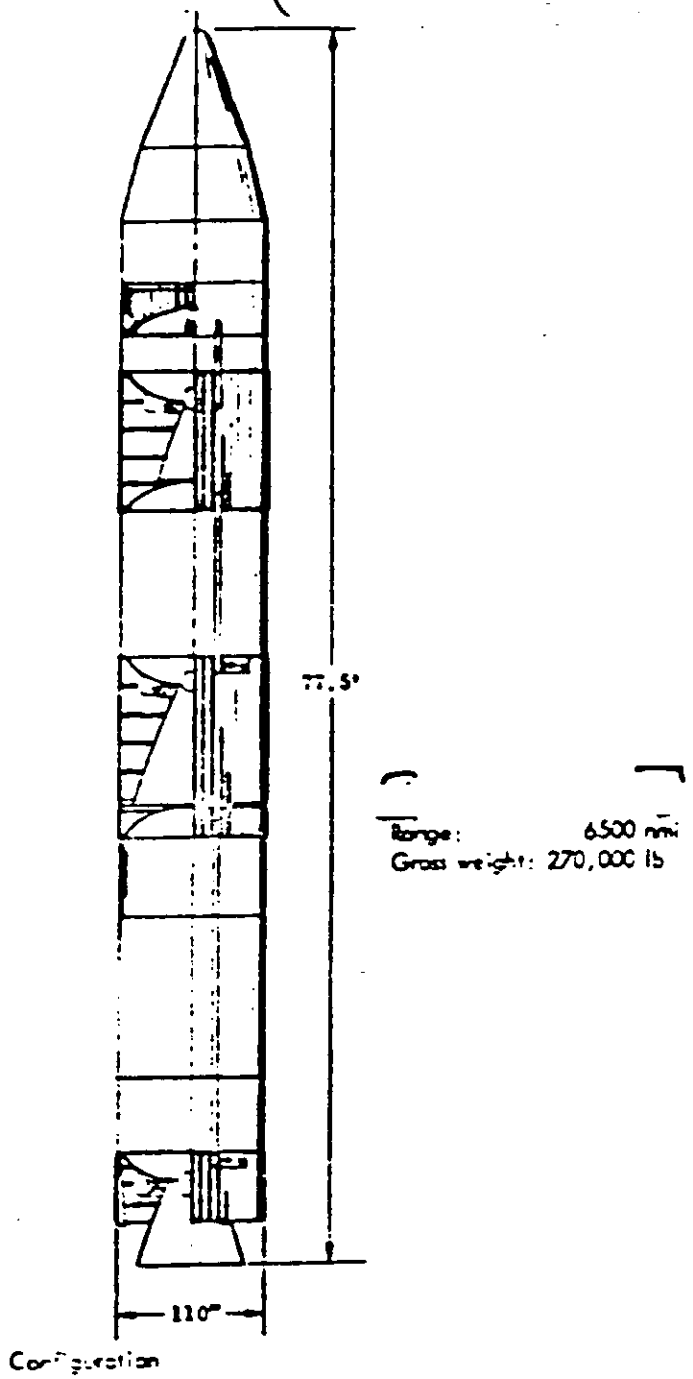

FIGURE 4 Land Mobile System Airborne Vehicle Configuration

unclas

of [ ] from a multimegaton weapon detonated under the most favorable conditions for the enhancement of weapon effects. Higher hardness levels (up to [ ] can be realized depending upon the azimuthal burst location, wave form, and whether the transporter-launcher is in the up and running or down and anchored position.

[redacted]

The hardened, shielded driving and operations cab is used for radiation protection for the crew. Prompt gamma and fallout radiation will be attenuated to a level of approximately [ ] The missile and ground electronic systems are hardened to withstand appropriate gamma radiation. A discussion of the uncertainties and implications of the hardness levels quoted above is presented in Section VII.

The transporter-launcher as a whole is designed to withstand a thermal pulse of approximately [ ] resulting from the multimegaton weapon.

3. AIRBORNE VEHICLE

The airborne vehicle for the Land Mobile System is a missile capable of 6500 nmi range with a [ ] The airborne vehicle is comprised of a three stage solid propellant booster, a post-boost vehicle, and an inertial guidance system. The configuration shown in Fig. 4 has a gross vehicle weight of 270,000 lb.

No structural penalties have been included to allow for possible effects of the airborne vehicle long-term operation in a horizontal position.

1. Booster

The booster is comprised of three solid propellant motors, aft skirt, interstage structures, thrust vector control, a cable raceway, and ordnance systems. The case material for the upper two stages is

SECRET unclas

552(b)(1)

a glass filament composite. The first stage uses a segmented high nickel steel case. Single swivelled nozzles are used on all stages.

2. Guidance and Control

a. Inertial. The guidance system considered for the Advanced ICBM is a pure inertial system. The SABRE (Self-Aligning Boost Reentry) guidance system is used as a typical all inertial guidance system; it is composed of a floated inertial measurement unit, external electronics and an airborne digital computer. Alternative guidance systems considered include radio in-flight correction and stellar-inertial. The baseline SABRE provides a system CEP of [ ] after fine gyrocompassing (approximately 1 hr) and has the capability to:

(1) Calibrate the inertial measurement unit while the missile is emplaced in the transporter-launcher.

(2) Provide a 360 deg azimuth coverage and self-aligning gyrocompassing mode employing the stabilization gyros. A design goal for the fixed base systems is [ ] arc sec, but this will be degraded for the mobile mode to approximately [ ] arc sec.

(3) Provide an infinite retargeting capability. That is, the airborne digital computer will accept target designation in terms of latitude and longitude and will generate all necessary constants for use in the guidance equations throughout flight. The targeting capability includes pre-flight verification, which consists of qualification of the target program, authentication of the target data produced for the specific assigned mission, and qualification of the flight equations. The total time required for retargeting and pre-flight verification is estimated to be less than [ ]

b. Aided inertial. Two alternate arrangements of aided inertial guidance systems may be incorporated into the Land Mobile Missile

System: radio in-flight correction or stellar inertial. The radio in-flight correction system includes the inertial guidance subsystem and a radio correction subsystem which essentially is an add on to inertial guidance and provides a means of updating velocity and position after booster cutoff. The ground radio stations consist of radio transmitters located in a special area downrange from the launch point. For the first reentry vehicle, a delivery CEP of [redacted] reentry vehicle.

The Stellar Inertial Guidance System utilizes a stellar sighting at the beginning of the post-boost vehicle deployment phase to correct the inertial platform attitude errors stemming from other inertial component or geodetic and geophysical error sources. The stellar sensor consists of a telescope and an optical sensor mounted as an integral part of the inertial platform. The stellar sensor electronics package decodes the sensor signals and provides a digital output to the airborne digital computer. For the first reentry vehicle, a delivery [redacted] vehicle.

c. Land navigation. Deployment of the Land Mobile System on a road grid network will allow the use of a few presurveyed checkpoints in each transporter-launcher deployment area and a large number of relatively crude position surveys throughout the road network. At the first order survey points, precise values of geodetic position, altitude, deflection of the vertical, and magnitude of the gravity vector are to be determined. All road intersections will then be located with respect to the first order survey points with an uncertainty of 300 ft or less. Deflection of the vertical and the magnitude of gravity will be determined by interpolation between first order survey points. Providing numerous checkpoints throughout the deployment area will bound the position uncertainty to an acceptable level and negate the requirement for a complex navigation system. The cost of the position location for the road intersections will be quite low compared to the cost of first order survey points because of the relatively large allowable uncertainty.

(U unclas

3. Post-Boost Vehicle

The post-boost vehicle consists of a deployment module, a reentry system, and an ascent shroud. The deployment module contains the missile guidance system, a main axial propulsion system, an attitude control system, and an in-flight electrical power system. An interchangeable reentry system which includes reentry vehicles and associated penetration aids is carried on the deployment module.

a. Warhead. The warhead technology used for reentry vehicle design is that of the 1970-80 time period.

b. Reentry vehicle. The basic reentry vehicle used for post-boost vehicle design is the reference multiple reentry vehicle [redacted] The design of the post-boost vehicle is compatible with the deployment of a variety of reentry vehicles.

c. Penetration aids. No penetration aids are deployed with the reference multiple reentry vehicle. Decoys and chaff may be deployed with the Mk 12 and Mk 17 reentry vehicles.

d. Deployment module. Propulsion is provided by an axial thruster with thrust vector control. Attitude control is provided by separate pitch, yaw, and roll control thrusters. The deployment module consists of [redacted] reference multiple reentry vehicles.

e. Guidance and post-boost vehicle control. The missile guidance system contains the inertial system which is in the deployment module navigation and missile guidance systems interface through the fire control system.

C. COMMAND AND CONTROL

1. General

A major portion of the existing hardware systems and techniques for command and control are applicable to the Land Mobile System. An Advanced ICBM System should logically be compatible with existing and planned communication systems such as [illegible], [illegible], [illegible], Primary

SECRET unclas

552(b)(1)

Alert System, and Post-Attack Command and Control System. There are, however, unique requirements for the Land Mobile System compared to MINUTEMAN and hardened and dispersed systems brought about by the mobile basing mode and improved system capability and flexibility for a future generation system which generate the need for introduction of new hardware mechanizations and the use of new techniques. A summary of the command and control system for the Land Mobile System configuration is shown in Fig. 5. A discussion of the communication equipments and the operation of the command and control system is included in Paragraphs C-2 and C-3, respectively.

2. Command and Control Configuration

a. Transporter-launcher. The command and control equipment contained in all transporter-launchers including those equipped as launch control centers includes UHF transceivers, HF transceivers, NSA crypto unit, ground data processor, power regulation equipment, and antennas.

b. Transporter-launcher/launch control center. All transporter-launchers are configured with weight and space provisions so that they may be equipped and manned to perform the launch control center function. One out of every 10 transporter/launchers will be so equipped and will function both as a transporter-launcher and as a launch control center (TL/LCC). The launch control center equipment installed in these selected transporter-launchers, over and above that contained in all transporter-launchers, includes the command and monitoring consoles, UHF receiver (ERCS 494L), LF receiver (487L), and operational equipment status monitor. The primary function of the TL/LCC is to monitor status and control the force at the local command level.

c. Wing and squadron headquarters. Wing and squadron headquarters are soft facilities and include the following equipments: AUTL terminal equipment, UHF transceivers, HF transceivers, status and maintenance monitoring equipment, and soft antennas. These facilities are interconnected with soft land lines.

~~SECRET~~

UNCLAS

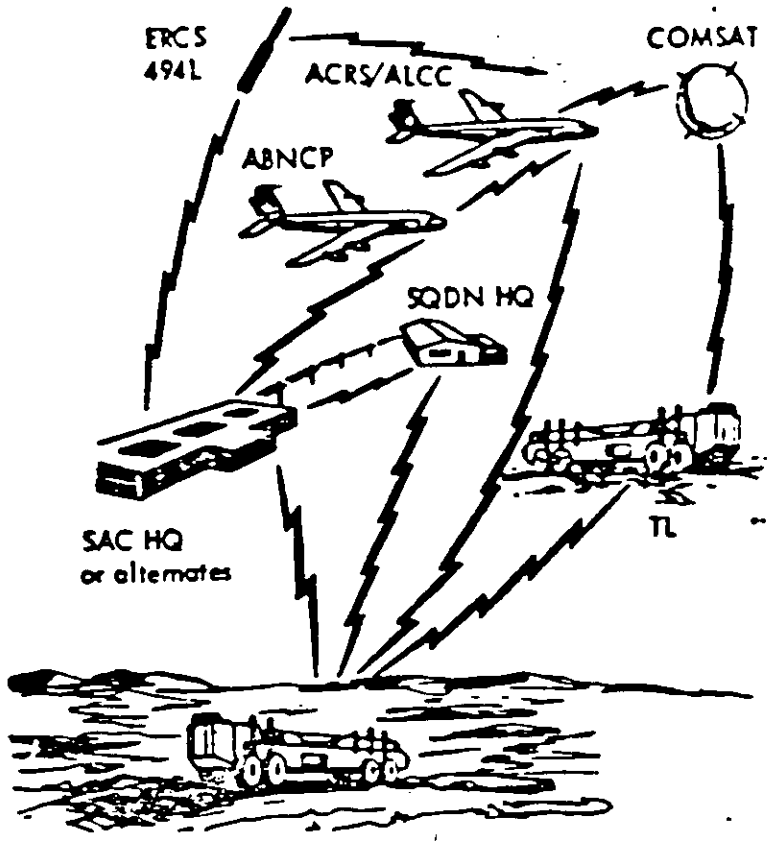

Requirements

- Positive control
- Status reporting
- Retargeting
- Emergency launch

Implementation

- Command—SAC/alternates
- Launch control center - T/L
- Launch vote and retargeting—2 TLs (LCC) or ALCC + TL (LCC)
- Communications - UHF, HF, 494L, LF, 465L, PAS, STN, & STT

FIGURE 5 Command and Control System

SECRET

unclas

3. Command and Control Operation

a. Pre-attack communications. The 465L, the primary alert system, SAC telephone network and the HF short-order network will provide secure voice and data channels for communications between wing and squadron and higher command. Intrawing communications is accomplished by the soft HF system and the soft land lines between the fixed squadron and wing bases. Communications with all transporte launchers including the TL/LCC's is by HF and UHF radio systems. These communication links are used to transmit maintenance data, system status at both the local level and to higher command, single integrated operational plan instructions, and administrative data. Each of the five TL/LCC's in a squadron monitors the operational status of the 50 operational units within the squadron for use in the trans- and post-attack environment.

b. Post-attack communications. In the post-attack environment two-way communication between SAC, SAC alternates, and airborne launch control centers with each transporter-launcher is accomplished via HF and UHF radio links making use of airborne relays where required. A designated TL/LCC within the squadron will provide status information to higher command. An inheritance of command procedure for the TL/LCC's within each squadron will be utilized. CINCSAC will retain operational command of the force. SAC or its surviving alternates will initiate launch enable messages, launch execute commands, targeting and retargeting instructions based on available information. These commands will be transmitted simultaneously to all TL/LCC's for action and to intermediate command levels for information. Replies consisting of receipt and verification of SAC messages as well as operational status summaries will be routed through the designated primary TL/LCC within each squadron. Communication between the TL/LCC's and the transporter-launchers within each squadron is accomplished using the UHF radio system. To ensure reliable communications particularly with attrition, each transporter-launcher will serve as a relay, and a simultaneous rebroadcast

unclas

technique is considered representative of the type of system mechanization which would satisfy the system requirements. In addition to the primary two-way communication links described above, each TL/LCC includes the necessary antennas and receivers for receipt of messages from the two backup systems, the 494L emergency rocket communication system and the 487L survivable LF communication system.

c. Positive control. Two launch votes will be required to effect a missile launch. One launch vote is generated by a cooperative action of two launch control officers at physically separated consoles in the TL/LCC. Transporter-launchers not equipped as launch control centers receive both launch votes from TL/LCC's within the squadron via the UHF radio system or from the airborne launch control center. Inhibit commands can also be generated by any TL/LCC's or the airborne launch control center. A single launch vote starts a timer contained within the aerospace ground equipment for the particular missile(s) commanded which allows any single TL/LCC in conjunction with the timer to accomplish missile launch if no inhibit command is received prior to timer runout.

SECRET

III. DETAILED PHYSICAL DESCRIPTION

This section presents additional details, parameter values, etc., of the system elements which were presented in Section II. The elements include:

A. Basing
B. Airborne Vehicle
C. Command and Control
D. Support Systems
E. Personnel Requirements
F. Security

A. BASING

The significant elements of the Land Mobile System basing will be discussed below and include a description of the deployment area, the network of the transporter-launcher travel paths, the mobility fraction, the transporter-launcher itself, and the vulnerability.

1. Deployment Area

The force is deployed in selected areas of western continental United States because of favorable terrain conditions, low population densities, and the presence of large tracts of public domain lands. The selected deployment areas have been depicted in Fig. 2 and summarized by state in Table 1. The current estimations on the available deployment area with possible additions and deletions are tabulated by land category in Table 2.

The type of surface ground material occurring in these areas is predominantly sandy soils which generally offer good transporter-launcher support and traction. About 65 to 70 percent of the soils are composed of fairly deep (but some shallow) silty-gravelly,

SECRET

unclas

unclas

Table 2

ESTIMATIONS ON USABLE AREA WITH POSSIBLE ADDITIONS AND DELETIONS*

Land Category	Area, sq mi
Unevaluated Adjusted Possible Additions[2]	
Public domain islands	800
National forests	1,200
National parks	7,400
State-owned land	1,000
Incompletely Evaluated Potential Deletions[3]	
Mining claims	17,500
Crucial wildlife habitats	8,200

[1]Evaluation includes ownership, terrain, land use, collateral damage, and contiguity.

[2]Unevaluated by criteria in 1. Adjusted on a percent basis by state for terrain suitability vs. total area.

[3]Area extent and compatibility of mining claim areas and crucial wildlife habitats with LM/R require further study.

* Additional factors requiring evaluation to determine actual usable area are land damage, effect on water resources, public reaction, and security feasibility.

unclas

E.O. 12(b)(1)

clayey-gravelly, silty, and clayey sands. Deep to moderately deep sand, and silty clays constitute about 20 percent; silts about 5 percent; gravel about 1 percent; and undifferentiated shallow sand, silt, and clay about 5 to 10 percent. The fine-grained surface soils (clays, silts) are not as suitable for mobility as the coarse-grained soils (sand, gravel).

The deployment area terrain which consists largely of high upland areas of flat plateaus and desert basins appears favorable for transporter-launcher mobility. The upland plateaus are dissected by canyons cut into flows of basaltic lava in the north and into horizontal beds of limestone, sandstone, and shale in the south. The basin floors are flat or saucer-like depressions with intermittent, interior drainage, and the margins of the basins are commonly sloping alluvial fans. The plateau surfaces contain such obstacles as canyons, gullies, short cliffs and trees whereas the desert basins have arroyos, stream cutbanks, and sandy hummocks. It is anticipated that these obstacles can be either circumvented, modified, or bridged when preparing the road networks.

The physical environment in the deployment areas varies greatly between the northern and southern sections. While extreme temperature differences will be found from -30°F in the north to +120°F in the south, the environmental control system of the transporter-launcher can handle such conditions. Annual precipitation over the area varies from 5 in. in the southern deserts of California and Arizona to 20 in. in parts of Wyoming and New Mexico. Although heavy snowfall occurs in limited areas in the north, the road network will minimize mobility problems associated with snowfilled gullies and reduced visibility. Average surface winds range from 5 to 20 mph, and local wind conditions of 40 to 60 mph can be anticipated.

The basic pattern of the primitive road network on which the transporter-launcher operates consists of pre-established travel paths on a [illegible] grid. The semi-prepared, marked paths are on surveyed east-west, north-south lines, terrain permitting, and are

S 3 2(b)(1)

35 to 40 feet wide. Surface irregularities are limited to 8 to 12 in., rounded, raised or depressed shapes (e.g., sand hummocks and shallow washes). Maximum slopes in the deployment area are 17.5 percent; however, the transporter-launcher will normally traverse gradients less than 10 percent. Grades of 20 percent can exist on access routes between operating zones.

2. Mobility Fraction

It was noted in Section III-A-3 that the Land Mobile System operating concept calls for a normal operating mobility fraction of 0.1 for minimizing costs, etc., and a dash mobility fraction based on early warning of 0.93 for maximizing survivability. During normal operations, the transporter-launchers and TL/LCC's will usually cruise over their assigned areas at some modest speed, such as 5 to 10 knots, mainly to keep in practice and to keep track of any possible deterioration of their pioneer roads which might interfere with their dash capability, if required. From time to time, they will accelerate to maximum speed for practice and to become familiar with road conditions that might require slowing down. All of this should help to keep down operating costs and reduce wear and tear both on the road and on the transporter-launcher and its equipment.

The transporter-launcher driver has no way of knowing the exact time of the enemy's observation or the exact time his weapon will arrive. Therefore, with a six min TOT, during which he can travel about three nmi, the driver's best evasive action is to proceed without stopping or reversing his course, and on reaching an intersection, to choose one of the three available paths on an equal

SECRET

probability basis. His maximum distance from the point of observation is therefore the product V_{max}(ICT).

If the enemy knows where the transporter-launcher is six min before impact, but not the direction in which it is traveling, his best tactic is to aim at the point of last observation, using a single large weapon whose lethal radius is at least V_{max}(ICT) against the transporter-launcher.

It can be seen that, under the conditions described above, the transporter-launcher will be traveling radially away from the aimpoint at least one-third of the time, so that the enemy should assume the end-on hardness value of the transporter-launcher in selecting his weapon size.

The foregoing discussion demonstrates the importance of having as high a dash speed capability as possible since it imposes a linearly proportional requirement on the enemy's lethal radius and a corresponding, although not linear, requirement on his throw weight per reentry vehicle.

3. Transporter-Launcher

The transporter-launcher is required to carry a missile with its support equipment and the launching device, in addition to providing hardness against nuclear attack. A number of transporter-launcher designs are feasible with the integral type recommended. An integral transporter-launcher for the lb payload missile is shown in Fig. 6 and has the following characteristics. It is approximately 105 ft long, 23 ft high, and 35 ft wide, with a gross weight of 1,050,000 lb. The maximum vehicle speed is 30 knots and the average speed is approximately 20 knots. The transporter-launcher has the capability to negotiate slopes of 20 percent. The operational characteristics of the transporter-launcher are shown in Table 3.

Fully fueled, each transporter-launcher will be capable of traveling 1000 mi and of operating the auxiliary power supply for a period of 20 days. Transporter-launchers will refuel from either

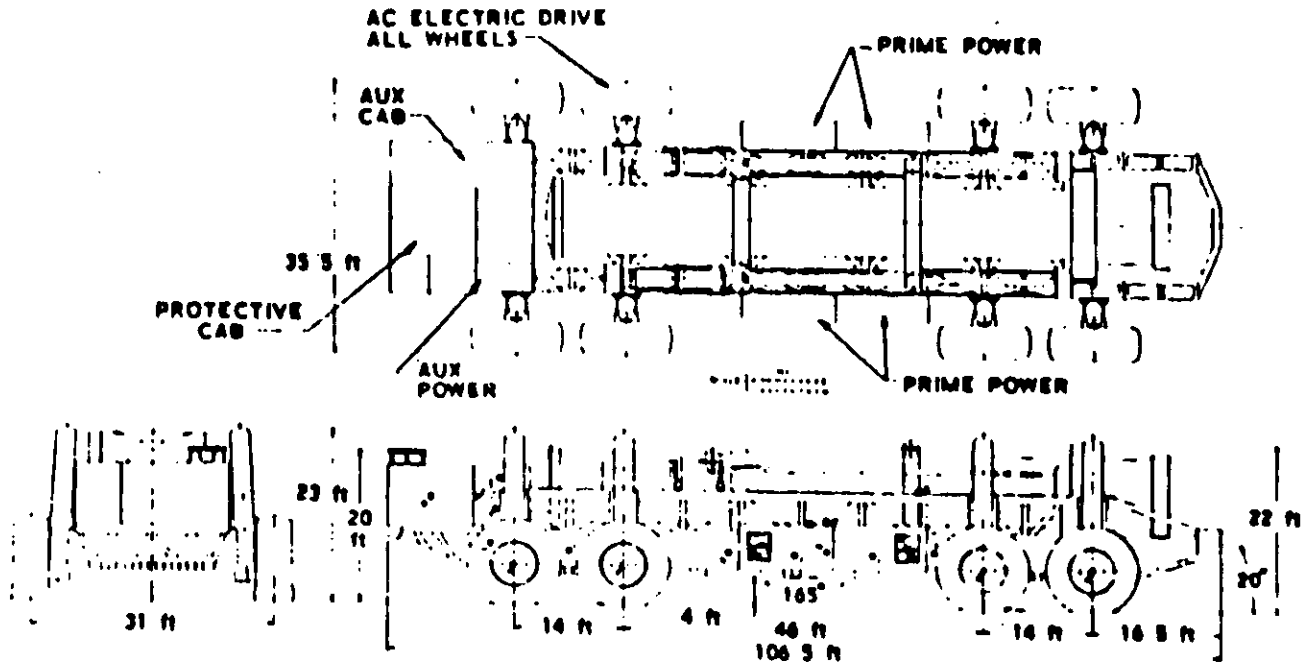

FIGURE 6 Transporter-Launcher Design

SECRET

Table 3

TRANSPORTER-LAUNCHER OPERATIONAL CHARACTERISTICS

Speed	
Maximum	30 knots
Average	20 knots
3% Adverse Grade	15 kt for 3.5 mmi
Grades	
Descending	30 %
Climbing and Side Slope	20 %
Launch	20 % maximum long
	5 % maximum lateral
Turning Radius	160.5 ft
Power	
Prime	4400 hp
APU	30 kw
Ground Clearance	
Normal	4.0 ft
Maximum	6.7 ft
Brakes	
Stop	160 ft from 30 knots on level ground
Park	30 % slope
Crew	
Transporter-Launcher	4 (2 officers, 2 enlisted men)
Transporter-Launcher/ Launch Control Center	6 (4 officers, 2 enlisted men)

uncl as

squadron storage tanks or from a main remote tank located in the deployment area. Refueling of the transporter-launcher will be accomplished each time it reaches the half-full condition (approximately 10 days). Trips for fuel (or for maintenance) can be most easily accomplished by having each transporter-launcher periodically move to an adjacent deployment area during a ten day period and thus, gradually progress toward or away from the squadron maintenance or refueling area. This concept has been identified as convolutional deployment.

Three hardened fuel caches will be provided for each transporter-launcher. These caches will be used only during post-attack period. The hardness of the caches will be approximately that of the transporter-launcher.

The transporter-launcher has eight wheels with 55.5 x 57 tires (12.5 ft in diameter), each independently suspended. The four front wheels are hydraulically steered. All wheels are electrically driven. The suspension for each wheel consists of a large-displacement, hydro-pneumatic strut which affords independent wheel action and vehicle ground height control. This suspension system permits the transporter-launcher to "pick up" a damaged tire/wheel and continue its movement at a reduced velocity.

The steering system incorporates electrical synchronization of steering commands with hydraulic control of the wheels resulting in a highly controllable configuration over the roads. The primary power source consists of four 1100 hp diesel engines, each coupled to an electric generator which, in turn, powers two wheels. Separate electric drive motors, gearing, and brakes are incorporated within each wheel.

The missile is contained in a launch tube which is erected for launching. An eject launch technique is used. The missile is guided during ejection by the launch tube adapters. Considering that a portion of the force will be parked and ready to erect and launch and the remainder of the force is either in motion or has not

SECRET
unclas

unclas

completed a one-hour gyrocompassing, the reaction time of the system is between 54 min and 65 min.

4. Vulnerability

The nuclear weapons effects of concern to the [redacted]

[redacted]

(1) Transported-Launcher Translation

[redacted]

(2) [redacted]

(3) [redacted]

SECRET

unclas

552(b)(1)

unclas

[redacted]

The crew cab of the transporter-launcher [redacted]

All electronic systems on the transporter-launcher, [redacted]

unclas

522(b)(1)

[redacted]

B. AIRBORNE VEHICLE

[redacted]

1. Booster

[redacted]

(1) [redacted]

(2) [redacted]

5T2(b)(1)

unclas

Table 4

MISSILE CHARACTERISTICS

Throw Weight, Capability, lb	[ ] at 6500 nmi, γ_{re} = 22 deg
Gross Vehicle Weight, lb	270,000
Missile Length, ft	77.5
Propellant (all stages)	Composite type with polybutadiene binder
Loading, %	88
Aluminum, %	20
NH_4ClO_4, %	68
I_{sp}, sec (std ref)	250
Density, lb/in.^{3}	0.065
Grain Design (all stages)	Cylindrically perforated
Nozzle -- all stages	Single submerged omniaxis type
Seal	Flexible bearing
Liner	Ablative plastic
TVC (pitch and yaw)	Hydraulic actuation of nozzle
RVC (roll)	Gas generator and nozzles
Thrust Termination (3rd stage)	Linear shaped charge on forward dome ports
Interstage Structure	Semi-monocoque
Motor Case Material	
First Stage	Segmented maraging steel
Second and Third Stage	S-994 filament--epoxy composite
Performance Reserve	2% of I_{sp} per stage (PSS)

Stage Characteristics	I	II	III
Stage Weight, lb	150,800	80,550	30,950
Propellant Weight, lb	134,000	72,930	28,000
Stage Mass Fraction	0.889	0.905	0.905
Stage Diameter, in.	110	110	110
Stage Length, in.	349	249	131
Chamber Pressure, psi	1000	1000	700
Nozzle Expansion Ratio	12	30	40
Nozzle Throat Diameter, in.	23.2	17.0	9.2
Burn Time, sec	55.0	50.7	84.0
Thrust (Vac), lb	661,000	412,000	96,600
Case Safety Factor	1.15	1.25	1.25
Case Joints	2	0	0

unclas

The grain is a cylindrical perforated design with performance based on a standard delivered reference specific impulse of 250 sec. Propellant density is 0.65 lb/in.^{3}. Ignitors used in all stages are pyrogen types of current design.

(3) Stage I and Stage II nozzles are ablatively cooled nozzles with graphite cloth phenolic throats and carbon cloth and silica cloth phenolic exit cones. The Stage II nozzle ilizes a tungsten insert throat with a graphite heat ink to minimize performance degradation due to erosion. All nozzles are partially submerged into the motor case--30 percent for Stage I and Stage II, and 26 percent for Stage III.

(4) Thrust vector control is obtained by use of hydraulic-actuated swivelled nozzles in all stages. Nozzle design is based on advanced elastomeric seal type configurations which have been successfully tested in smaller sizes. Roll control is provided by means of a solid-propellant warm gas generator system. Separate battery packs in each stage are used to provide electrical power for the hydraulic nozzle actuation system.

(5) The booster ordnance consists of a conventional safe-arm (arm-disarm switch) system with initiators. Ordnance functions include stage ignition, stage separation, gas generator ignition, thrust termination activation, and in-flight destruction (RSD). Thrust termination is provided by simultaneously opening with linear shaped charges multiple forward-canted ports in the head end of the third stage motor case upon command from the guidance and control subsystem. Motor design permits thrust termination after 43 or more seconds of third stage burn which provides missile ranges down to 2000 nmi.

unclas

(6) Interstage structures between stages as well as the aft skirt are of aluminum alloy semimonocoque type. Access doors are provided to permit inspection and maintenance of internal components. Linear shaped charges are used for stage separation.

2. Guidance

a. Inertial. The baseline guidance system is an all inertial system (typified by SABRE) composed of a floated inertial measurement unit, external electronics and an airborne digital computer. A summary of the physical characteristics of the guidance system is presented in Table 5.

Table 5

GUIDANCE SYSTEM PHYSICAL CHARACTERISTICS

(1) Inertial Measurement Unit. The inertial measurement unit is comprised of two concentric spheres, the outermost being approximately 12 in. in diameter. The inner or stable member contains the inertial instruments and associated electronics and is floated in a fluorocarbon fluid. Four dual electrical brushes, mounted on the inner sphere in the form of a tetrahedron, serve to make contact with two electrically isolated halves of the outer sphere for transmission of DC power and multiplexed signals. Radial and tangential fluid jets

located in valves or pads on the neutrally buoyant inner sphere are utilized to keep the inner sphere centered and space oriented within the outer sphere. The outer sphere is made up of two aluminum hemispheres on which are mounted two attitude readout bands, four alignment windows, and an ammonia cooling system.

(2) Inertial Measuring Instruments. The inertial instruments, three 16 PIGA-J accelerometers and three 2FBG-10H gyroscopes, are mounted in a beryllium frame inside the inner sphere of the inertial measurement unit.

Beryllium is used as the major structural material because of its high strength, low weight, long-term dimensional stability and good thermal properties. The 2FBG-10H gyro is a single-degree-of-freedom floated beryllium integrating gyro with a symmetrical wheel; it is an improved version of the 2FBG-6F gyro used in TITAN II.

(3) Airborne Digital Computer. The airborne digital computer for the baseline system is a general-purpose solid-state machine using a stored program with random-access memory. The functional capability is sized to accomplish on-site targeting. In the baseline configuration, the airborne digital computer will be designed to accommodate the navigation, guidance and control for the boost phase, including the multiple independent reentry vehicle operation, and the storage of items such as the initial conditions, gravity model, and pre-selected targets as well as on-site retargeting. The remaining launch facility data processing functions, including message processing, encoding, decoding, status reporting, etc., will be accomplished in a ground-based computer.

(4) Functional Capabilities. The functional capabilities are:

(a) Field calibration--The guidance system will have the capability of calibrating the inertial measurement unit while the missile is emplaced in the transporter-launcher. The purpose of this field calibration is to compute and store in the airborne digital computer memory, certain constants which are necessary to compensate during flight for the operating characteristics of the accelerometers and gyroscopes in the missile inertial measurement unit. The time required for the entire field calibration using current techniques is estimated to be from four to seven hr.

(b) Azimuth--The guidance system will have a 360 deg azimuth coverage in a self-aligning gyrocompassing mode employing the stabilization gyros. A design goal for the accuracy of the self-aligning gyrocompassing capability is [ ] sec.

(c) Retargeting--The guidance system will have an infinite retargeting capability, i.e., the airborne digital computer will accept target designation in terms of longitude, latitude, and altitude, and, on the basis of this information, generate all necessary guidance constants for use by the guidance equations throughout the flight. The general targeting capability will include a pre-flight verification capability. This latter includes the qualification of the target program, authentication of the target data produced for the specific assigned mission, and qualification of the flight equations. The total time required for retargeting and pre-flight verification is estimated to be less than [ ]

unclas

(d) Accuracy--The accuracy of the guidance system will permit the achievement of a weapon system CEP of about [ ] nmi at a 5500 nmi range with a high ballistic coefficient reentry vehicle [ ] An accuracy summary for the overall weapon system is presented in Table 6.

Table 6

LAND MOBILE SYSTEM ACCURACY BUDGET
(First Reentry Vehicle)

(5) Flight Control. Flight control will be a combined function of the control and propulsion subsystems. Vehicle attitude commands and error signal shaping will be provided in the guidance and control subsystem. The propulsion subsystem will provide the thrust vector control in response to the control signals from the guidance and control subsystem as well as the auxiliary motor required for roll control moment generation.

(a) Radio In-Flight Correction provides a technique for updating the missile position and velocity

unclas

during free fall after booster burnout and before the post-boost vehicle deploys reentry vehicles. Guidance during boost is performed by the SABRE inertial guidance system. After the boost phase, a sequence of radio measurements are made and the data are used to correct the velocity as measured by the inertial guidance system. Depending upon the post-boost vehicle deployment sequence, one or more sets of radio measurements may be made.

The radio in-flight correction equipment which must be added to the conventional inertial guidance system consists of an X-band receiver, an antenna system located in the missile and a series of ground stations. The equipment is not under development. The missileborne receiver is a narrow band X-band receiver weighing about 30 lb; the missile antenna is a fixed circularly polarized X-band unit weighting about 5 lb. The radio ground station consists of an atomic frequency standard, frequency synthesizer capable of deriving any chosen frequency from the 512 possible, an X-band power amplifier and antenna. The ground stations may be portable or located at hardened sites. A command and control link must be provided. A missile in-flight radio correction requires fixes from a minimum of three ground stations. There is no limitation to the number of missiles which can operate with a given station or array of stations except for the inherent requirements for radio line-of-sight access ten deg or more above the horizon. A preferred geometry would provide three or more ground stations spread along a line approximately 500 mi long, normal to the trajectory plane and underneath the missile during the radio measurement. The number of ground

UNCLAS

stations required for the missile force is a function of the weapon system deployment configuration, the enemy threat, and the hardness of the ground stations.

Estimated accuracy for the radio in-flight correction guidance system is [ ] ft and [ ] ft for the high- and low-β vehicle, respectively.

(b) The Stellar Inertial Guidance System utilizes a stellar sighting to correct for inertial platform attitude errors stemming from either inertial component or geodetic and geophysical error sources. It may be employed during boost and midcourse guidance such as the deployment phase of multiple independently targeted ballistic reentry vehicles. The guidance system is composed of a stellar inertial measurement unit, stellar inertial measurement unit electronics, and an airborne digital computer. Typical characteristics are:

The major difference between a computer for a stellar inertial application and for an all inertial application is approximately a 1500 word increase in memory requirement necessitated by computational functions unique to the stellar system. The computer which has been postulated for SABRE will also be able to perform the stellar guidance function.

Estimated accuracy for the stellar inertial guidance system is [ ] ft and [ ] ft for the high- and low-β vehicle, respectively.

(c) Land Navigation. The overall operation of the Land Mobile System requires that the initial conditions for launch be bounded to an acceptable level to achieve the desired system CEP. The initial condition error sources are uncertainties in latitude, longitude, altitude, magnitude of the gravity vector, and deflection of the vertical. Deployment of the Land Mobile System on a road grid network makes it feasible to use numerous checkpoints which will provide acceptable initial conditions without requiring the use of a complex navigation system. The concept is to establish one or more first order checkpoints in each transporter-launcher deployment area, the quantity required being a function of the particular terrain, and, specifically, the distance that interpolation of the magnitude of the gravity vector and deflection of the vertical can be used without exceeding the error budget. All road intersections within the deployment area will then be located with respect to the first order survey point(s) with an uncertainty of [redacted] ft or less. In operation then, while the transporter-launcher is in motion, its position is updated at each intersection which typically would be at approximately two mi intervals which would bound the navigation error consistent with the accuracy shown in Table 6.

The system error budget includes an estimate of the geophysical and geodetic uncertainties for the 1970 time period and their contribution to the system CEP. The standard deviation of uncertainty (one sigma) is [redacted] ft for the geodetic latitude and longitude, [redacted] ft for the geodetic height of the launch site, and [redacted] ft height above mean sea level. The cost of establishing the first order survey points

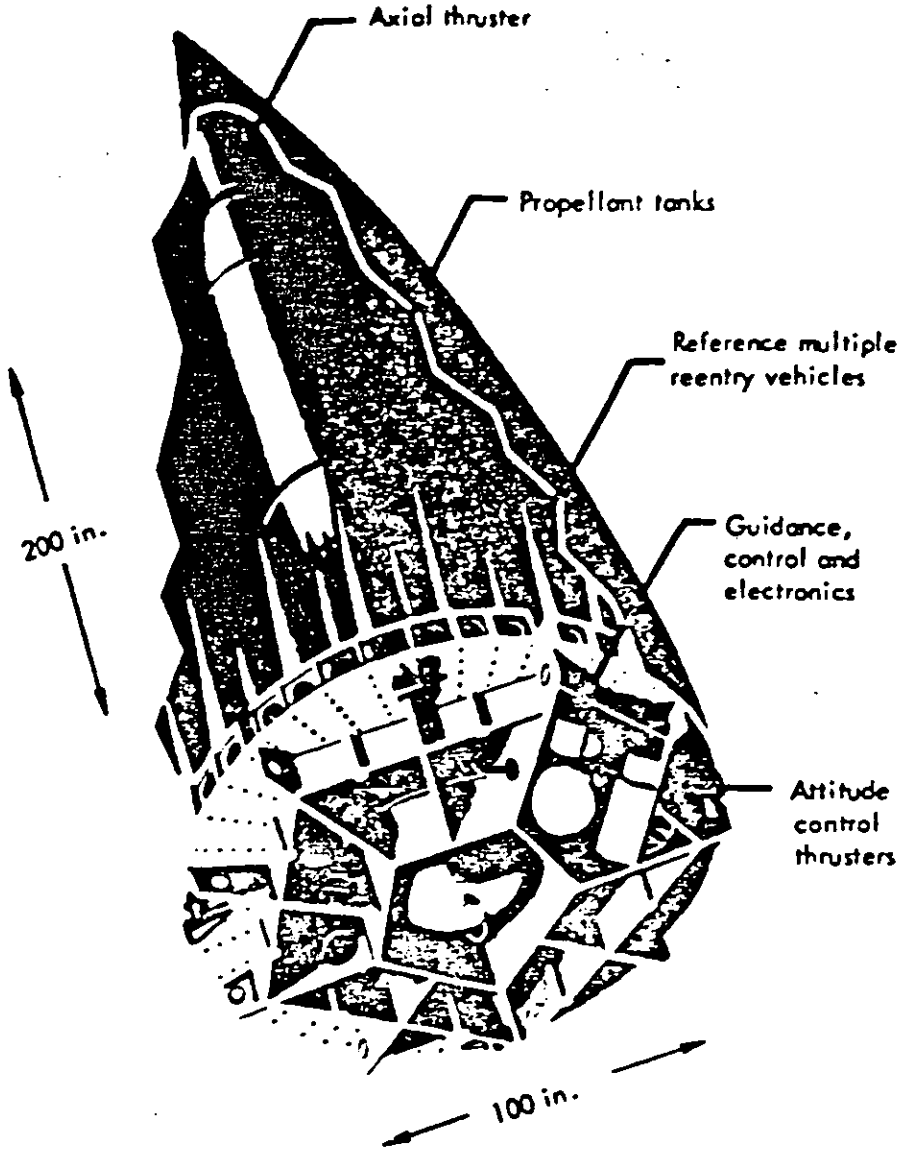

FIGURE 8 Post Boost Vehicle Configuration

SECRET

unclas

for these data, magnitude of gravity and deflection of the vertical is estimated to be $1000 to $1500 each. The cost of the relatively crude position surveys for the road intersections is estimated to be several hundred dollars which is low cost because of the relatively large allowable uncertainty.

3. Post-Boost Vehicle

a. General characteristics. The post-boost vehicle is a single deployment module (bus) configured to permit maximum flexibility in the choice of payload and deployment capabilities. The baseline reentry vehicle is the reference multiple reentry vehicle. However, capability of deployment of Mk 12's or reference multiple reentry vehicles with penetration aids is incorporated. The deployment module contains the missile guidance system, a propulsion system, and an attitude control system. An interchangeable reentry system is carried on the deployment module protected by an ascent shroud which is ejected during second stage burn. Figure 8 illustrates the post-boost vehicle design with a reference multiple reentry vehicle installation. The baseline post-boost vehicle utilizes a liquid bipropellant axial thruster and mono-propellant attitude control thrusters.

The post-boost vehicle configuration shown herein primarily reflects the requirements of hard and dispersed form of basing design. Due to a limited amount of design data, the impact of the horizontal loadings on the post-boost vehicle design concept was addressed only in the qualitative sense. It was assumed that the post-boost vehicle/booster system would be supported and shock isolated so that loads would not be greater than those experienced during flight. However, it is recognized that certain structural modifications may be necessary to support the post-boost vehicle in the horizontal position. In particular, the cantilevered reentry vehicles, center pylon, nozzles, fuel tanks, etc. could require additional supporting structure. For the designs presented herein, no penalties have been assumed.

Unclas

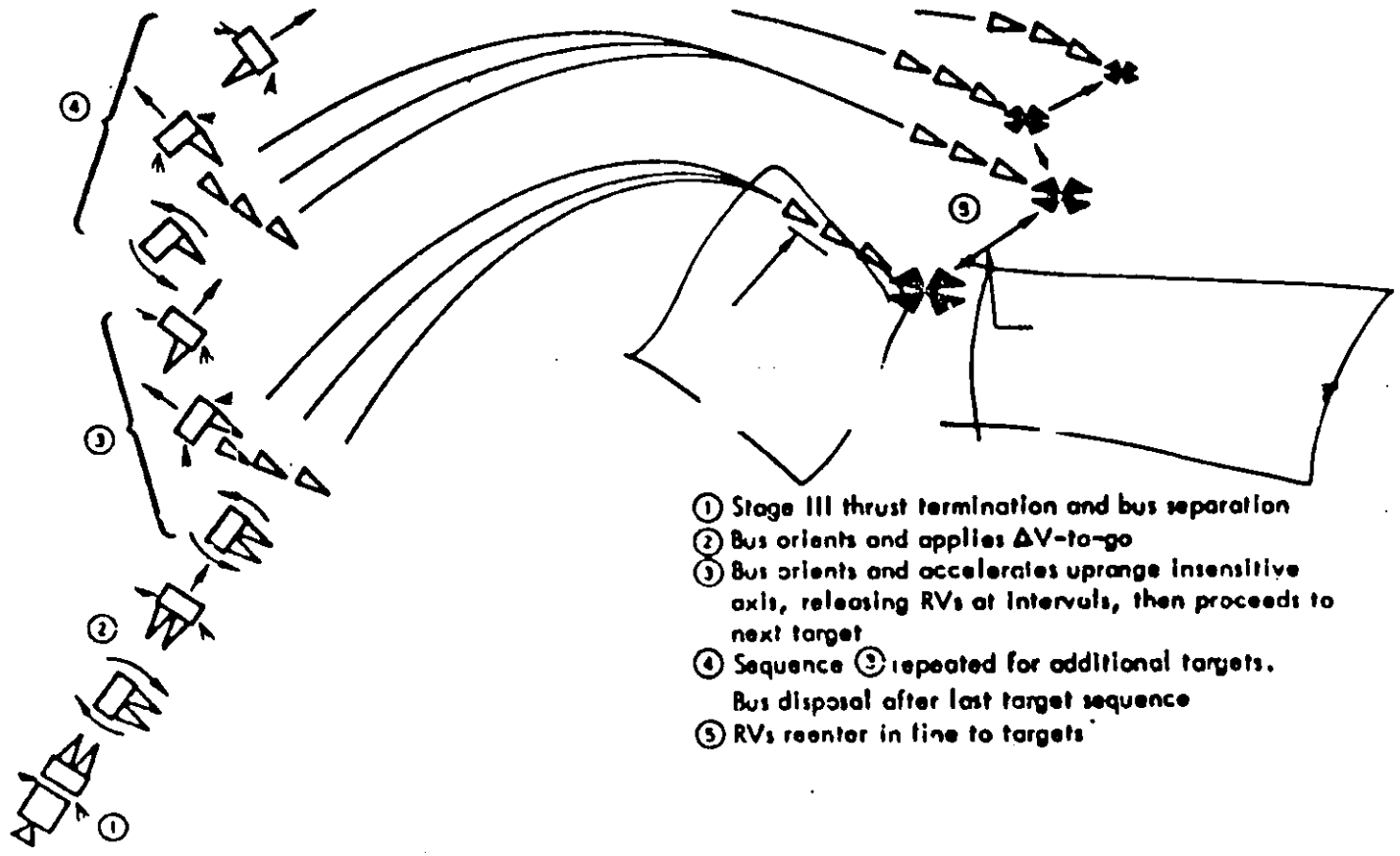

FIGURE 9 Typical Deployment Sequence

SECRET

(1) The post-boost vehicle is designed to deliver the reentry objects in an in-line pattern for defense penetration or in a footprint pattern for attacking multiple targets or can be programmed for combinations of the two patterns. The typical deployment sequence of events for a combined in-line/footprint targeting pattern is shown in Fig. 9. In this case, the post-boost vehicle propulsion system accelerates the deployment module up the range insensitive axis for in-line deployment of multiple objects against a single target. After release of the preestablished number of objects the deployment module is directed to a new trajectory for a subsequent target.

(2) The basic payload combinations are as follows:

	Numbers of Objects Delivered			
RV Type	No. of Targets	No. of RVs	8% Decoys	Chaff
RMRV*	4	[illegible]	-	-
12	10	10	-	-
	5	5	25	30
17	6	6	-	-
	4	4	-	-

Table 7 contains a description of the reentry vehicles and penetration aids. Other reentry vehicles such as the Mk "X" and Mk "XX" and maneuvering reentry vehicles may also be carried.

*Reference Multiple Reentry Vehicle

b. Axial thrust. The axial thrust required for incremental velocity maneuvers of the post-boost vehicle is provided by a single centrally mounted liquid propellant thruster capable of thrust vector control in pitch and yaw. Storable hypergolic bipropellants (N_2O_4/N_2H_4) are pressure fed from the propellant tanks. The thrust vector control provides for offset center of gravity during the reentry vehicle release sequence as well as for thrust vector alignment along the desired trajectory.

c. The attitude control system. The attitude control system utilizes multiple pitch, yaw and roll thrusters to produce control torques and/or low level translation thrust for vernier movement. The liquid monopropellant attitude control system thrusters utilize hydrazine (N_2H_4) pressure fed from a propellant tank.

d. Hardness. The in-flight hardness goals for the booster and post-boost vehicle are given in Table 8.

Table 8

C. COMMAND AND CONTROL

1. System Configuration

A pictorial representation of the wing structure for the Land Mobile System and the command and control intrawing communications is shown in Fig. 10. The wing headquarters is associated with an existing Air Force base and the wing and squadron maintenance bases will be fixed and soft. A summary of the command and control system showing the survivable post-attack communication links between higher command and a typical squadron element is shown in Fig. 11. Five of the 50 transporter-launchers in a squadron are equipped and manned to provide the launch control center capability.

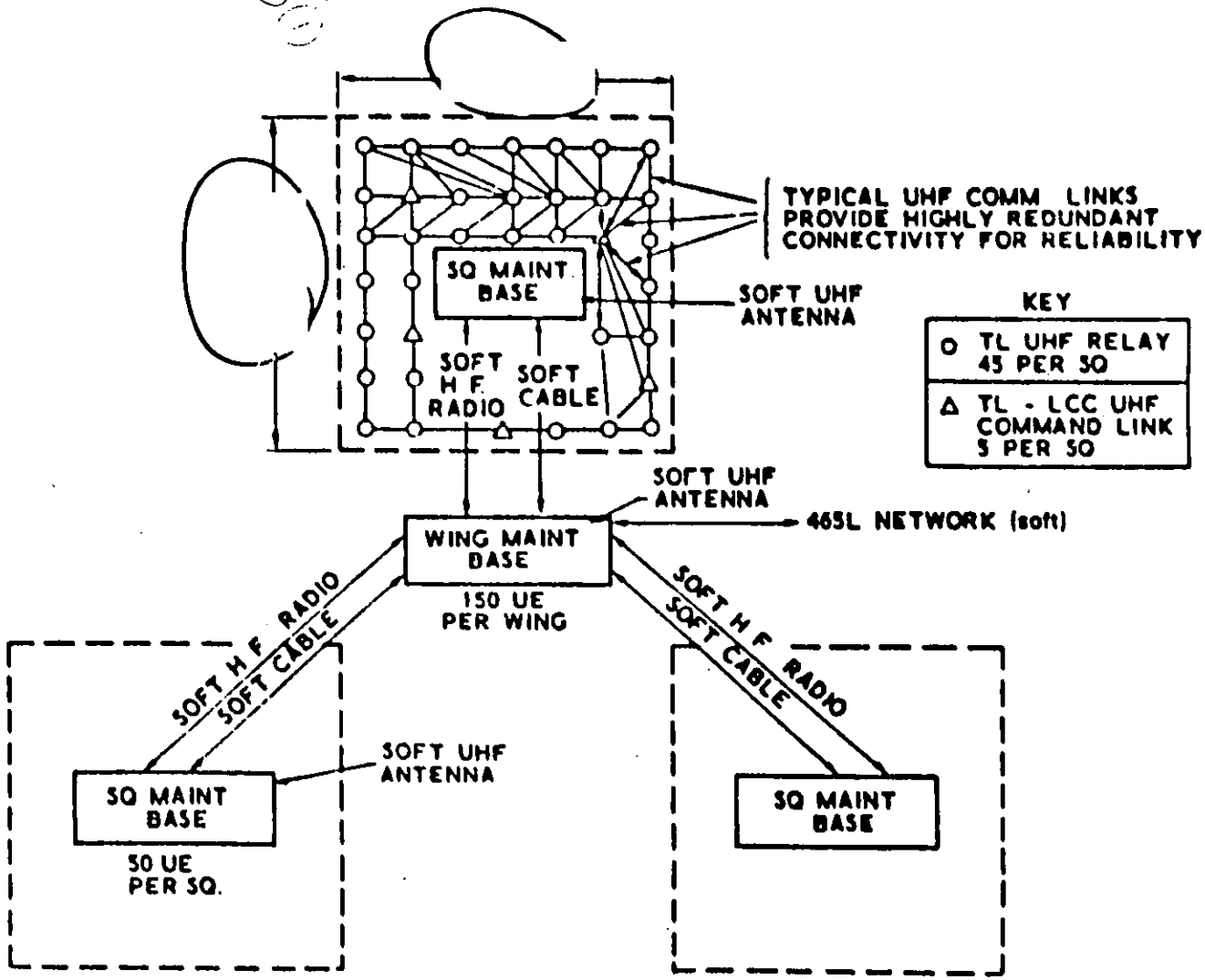

FIGURE 10 Wing Structure--Land Mobile System

SECRET

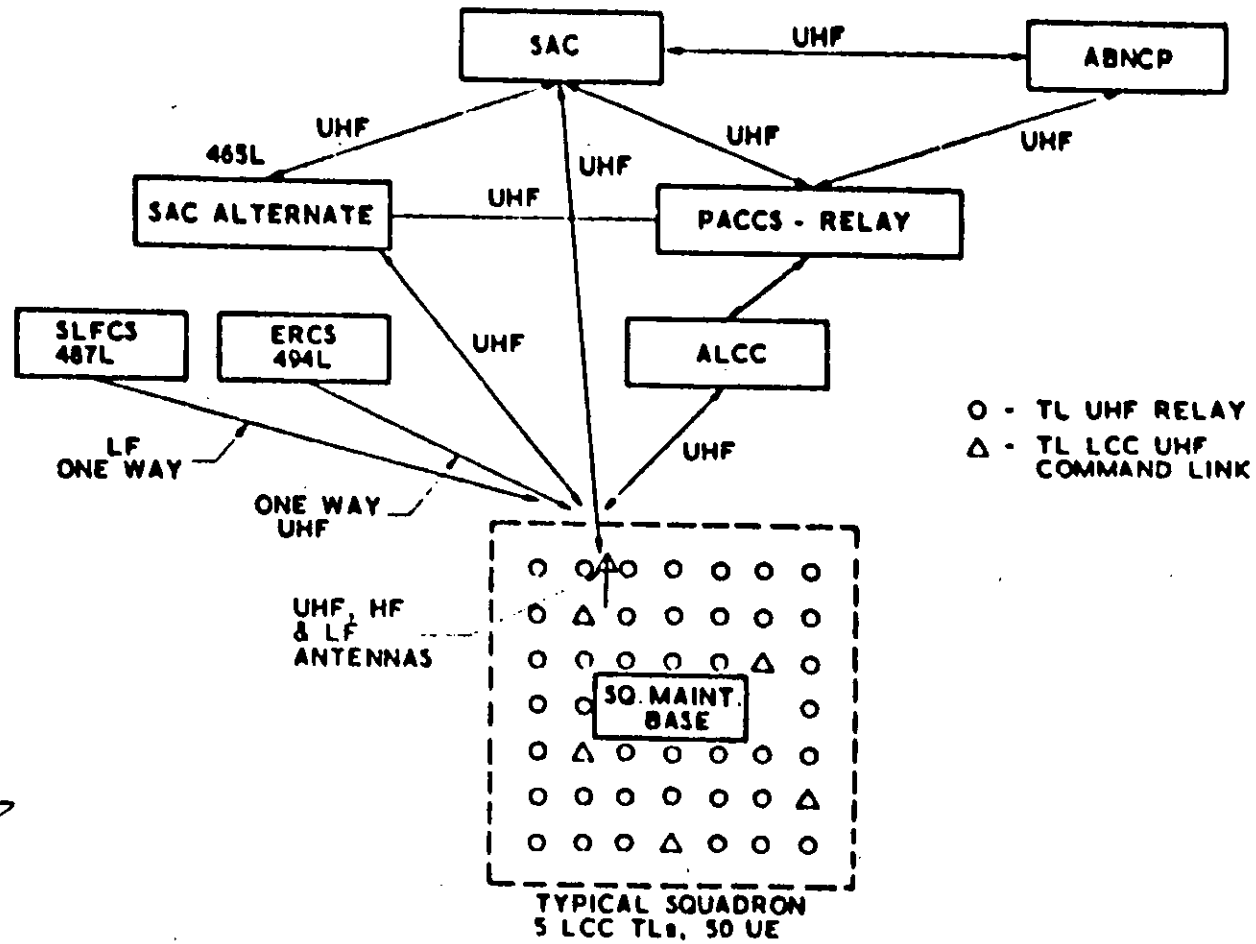

FIGURE 11 Command and Control System Summary

SECRET

2. Operational Description

a. Operational control. Each transporter-launcher/launch control center will have the capability for communications with SAC and higher command as well as other elements within its squadron via the UHF and HF communication systems. Each transporter-launcher/launch control center within a squadron will maintain current status information on all units of the squadron and will have the capability for the control and launch of any missile within the squadron. To perform these functions efficiently, it will be necessary to establish a command inheritance capability so that any single surviving transporter-launcher/launch control center in a squadron can be designated the primary transporter-launcher/launch control center, initiating all required actions and transmissions to higher command. Any other surviving transporter-launcher/launch control center in the squadron can assist the designated primary launch control center in the performance of its required actions and, having been monitoring status and other transmissions, can take over the primary responsibility and associated command if necessary. Receipt of SAC instructions will be authenticated and verified by all transporter-launcher/launch control centers using the two-way UHF communication system, including airborne relays as required, and the HF radio.

Provision will be made to utilize military satellite communication when an operational satellite system becomes available.

b. Squadron communications. Each transporter-launcher, including the transporter-launcher/launch control centers, is equipped with UHF transceivers and appropriate antennas for intrasquadron communications. To achieve reliable communications throughout a squadron area and allowing for attrition in the post-attack environment, a relaying technique will be used in which each transporter-launcher rebroadcasts all messages received. The simultaneous rebroadcast technique commonly referred to as SIMULCAST is representative of the type of communication system mechanization applicable in this case. SIMULCAST is a synchronized system where

each transceiver is controlled in frequency by an accurate timing source. Overall control of the system is maintained by the designated primary transporter-launcher/launch control center. In SIMULCAST a message frame is established which is typically divided into eight time slots where the unit initiating the message always transmits in the first time slot of the message frame. All units receiving that message retransmit it simultaneously in the second time slot and so on. A typical squadron deployment showing dimensions of the area and the average communication link lengths is included in Fig. 10. The transporter-launchers transmit status information, security alarms, and administrative messages to the transporter-launcher/launch control centers using the UHF communications systems. The transporter-launcher/launch control centers transmit commands to the transporter-launchers, status reports to wing and higher commands, authenticate and verify receipt of SAC messages, etc. via the UHF communication system.

c. Wing communications and communications with higher command. Wing headquarters will be primarily concerned with maintenance and other administrative functions. In the pre-attack environment both wing and squadron communications with higher command are via the soft HF radio system and the 465L command and control network. The 465L system is a digital data link connecting SAC and SAC alternates with wing and squadron command levels using leased AT&T long-line redundant cable network. In the post-attack environment communications with higher command is primarily between the operational units and SAC using the UHF communication system. The operational concept does not rely upon survival of the soft wing and squadron commands. Wing and squadron commands will continue to monitor message traffic in the post-attack environment so long as their capability survives or recovers. As shown in Fig. 11, the UHF network includes the airborne launch control center and the post-attack communications control system relay aircraft. When a military communication satellite becomes operational, it will augment the post-attack communications control system providing further

redundancy and, hence, enhance survivability of communications between transporter-launcher/launch control centers and SAC or SAC alternates.

d. Weapon control. Positive control of the missile force, as defined in DOD Directive 5200.16, and other nuclear safety regulations will be satisfied by requiring three separate signals to effect an immediate missile launch. The first signal required is the launch enable code which can be initiated by any transporter-launcher/launch control center within a squadron upon proper authorization from SAC. The other two signals required are launch votes provided from two separate sources, either transporter-launcher/launch control centers and/or the airborne launch control center.

When a transporter-launcher/launch control center transmits a launch enable code to one or more transporter-launchers, this enable code is also relayed to all other transporter-launcher/launch control centers within the squadron. Any transporter-launcher/launch control center within the squadron can then take action, if determined appropriate, to negate the effect of the launch enable code by initiating a launch inhibit command. Receipt of the launch inhibit command at the transporter-launcher will cause the missile to revert to a safe alert posture. If no inhibit command is received, then the missile can receive and process the required launch votes to accomplish missile launch.

The transmission of a single launch vote, which can be transmitted by the same transporter-launcher/launch control center that initiated the enable code, starts a timer associated with the particular missile or missiles which may be set remotely from SAC for any pre-selected time period from a few minutes to several hours. Neither the launch crews nor anyone at the local command level can control the timer nor do they have a knowledge of its present interval. If no inhibit command is received and no further action is taken, the missile will launch when the timer has run for the preset interval. Launch inhibit commands generated by any transporter-launcher/launch control center or airborne launch control center can

SECRET

return the missile or missiles to the safe alert posture if received prior to timer runout.

In the event a launch enable code is followed by two valid launch votes from two separate transporter-launcher/launch control centers (or airborne launch control center), the enabled missile or missiles will launch immediately. Generation of either a launch enable code or a launch vote by a transporter-launcher/launch control center requires the cooperative effort of two members of the transporter-launcher/launch control center crew.

Other protective measures include initiation of visual displays and audible alarms at all transporter-launcher/launch control centers within a squadron when command transmissions are generated. The enable and launch execute signals will be coded to meet positive control requirements and to provide suitable protection against unauthorized or inadvertent launch. Retargeting of any missile or missiles will utilize the two man, two vote technique similar to the positive control for launch or missiles. Physical protection of elements of the command and control system and sensitive data is accomplished by encryption/decryption equipment, tamper proof containers, and enclosures which will volatilize sensitive data upon operator command or unauthorized attempts at physical access.

3. Command and Control Equipment

The complement of equipment for wing headquarters, squadron headquarters, transporter-launcher/launch control centers and transporter-launchers is shown in Table 9.

D. SUPPORT SYSTEMS

1. Maintenance Concepts

The maintenance concept is best presented graphically in matrix format. Table 10 shows the maintenance functions to be performed on each subsystem, categorized on the basis of type of maintenance, level of maintenance, and the location of maintenance area.

SECRET

Table 9

COMMAND AND CONTROL EQUIPMENT

Wing Headquarters Equipment

- NSA Crypto, Secure Data Transmission, and Signal Processing Equipment
- Physical Security and Deployment Console
- Signal Processing Electronics
- 465L Equipment
- UHF Transmitter, Receiver, Power Supply and Control
- HF Transmitter, Receiver, Power Supply and Control
- UHF, HF Antennas (soft)

Squadron Headquarters Equipment

- UHF Transceiver
- HF Transceiver
- NSA Crypto Unit
- Console for Message Generation, Deployment and Dispatch Control
- Signal Processing Electronics
- 465L Equipment
- UHF, HF Antennas (soft)

Transporter-Launcher Equipment

- NSA Crypto Units
- UHF Transceiver
- UHF Transceiver (Standby)
- Digital Data Group (Computer)
- Power Regulation Equipment
- Antennas

Launch Control Center Equipment*

- Launch Control Console
- Communication Control Console
- NSA Crypto Units
- HF Transceiver
- UHF Transceiver
- UHF Transceiver (Standby)
- UHF Rocket Broadcast Receiver (494L)
- LF Receiver (487L)
- Digital Data Group (Computer)
- Power Regulation Equipment
- Antennas

Airborne Launch Control Center Equipment

- UHF Transceivers
- HF Transceivers
- NSA Crypto Units
- Command Consoles (4)
- Status Monitor Consoles
- Data Processor
- Interphone System
- Power Converters and Regulation
- Antennas

*Each transporter-launcher is configured with weight and space provisions for launch control center equipment. Only one transporter-launcher in ten will be so equipped.

SECRET

Table 10

MAINTENANCE CONCEPT

Subsystem	Maintenance Location			
Failure Rate	Mission Maintenance	Resupply Maintenance		
	At TL	Repair at SMB*	Repair at WMB**	Repair at Depot
Propulsion 1 failure/sqd/60 days	None	Remove and Replace Assembly	Remove and Replace Assembly and Subassembly	Complete Teardown Repair
Guidance 4 failures/sqd/month	None	Remove and Replace Failed Assembly or Subassemblies	Subassembly Replacement Capability	Complete Teardown Repair
Reentry Vehicle 1 failure/sqd/180 days	None	Remove and Replace Assemblies	Repair Subsystem Assembly	Complete Teardown Repair
Aerospace Ground Equipment 2 failures/sqd/ every month	None	Remove and Replace Assemblies Repair of Selected Sub-assemblies	Repair of Assemblies Subassembly and Selected Modules	Complete Teardown Repair
Transporter-Launcher 1/failure/sqd/ month	Remove and Replace Failed Sub-assemblies with Mobile Team	Remove and Replace Assemblies	Complete Teardown Repair	None

* Squadron maintenance base.
** Wing maintenance base.

SECRET

a. Types of maintenance

(1) Mission maintenance is that maintenance which is normally performed at the operational location by organization level personnel to return an inoperative weapon to fully operational status as rapidly as possible through the removal/replacement of the faulty component.

(2) The repair of reparable components for the purpose of replenishing serviceable stocks is normally performed by field/depot level maintenance personnel at wing/depot locations. By expediting such resupply actions, the floating spares investment required to support mission maintenance is minimized. Thus, in terms of cost-effectiveness objectives, mission maintenance aims primarily at maximizing operational effectiveness, whereas resupply maintenance serves primarily to minimize logistics costs.

b. Levels of maintenance. The skills and equipment required to perform a particular maintenance function constitute the fundamental basis upon which the three "levels" of maintenance described in AFR 66-1 are established.

(1) Organizational level maintenance, performed by personnel of the operational squadron, is normally limited to less complex tasks such as inspection, testing, adjusting, lubricating, and other servicing actions, but also includes limited capability to remove and replace faulty components.

(2) Field level maintenance normally includes major inspections, testing, calibration, and selective capability to repair reparable subsystems/assemblies/subassemblies/modules removed from the organizational level.

SECRET

Unclas

(3) Depot level maintenance includes all maintenance actions beyond the capability of field level organizations.

c. Location of maintenance. Maintenance actions can be performed at the transporter-launcher missile maintenance sheds (SITE), at the squadron maintenance base (see Figs. 12 and 13); at the wing maintenance base, and at the Air Force Logistics Command specialized repair activity or contractor facility. These maintenance locations do not necessarily coincide with the levels of maintenance previously described, since it is sometimes more cost effective to move higher level maintenance skills and equipment temporarily to a forward maintenance location rather than to evacuate the reparable item to a higher location where skills are normally available. The squadron maintenance facility will include a transporter-launcher assembly and maintenance building. A separate building is provided for missile checkout, maintenance, and installation of the missile in the launch tube. The sabot within the launch tube will have the capability to act as an air elevator. The majority of the airborne vehicle equipment maintenance will be performed at the squadron maintenance base inasmuch as the size of mobile ground equipment and the packaging concept for the missile minimize the opportunities for performing airborne vehicle equipment maintenance at the transporter-launcher location.

2. Supply Concept

The range and depth of spares (recoverable items) and repair parts (nonrecoverable) required to support this system will be determined by the source coding and provisioning actions which must be accomplished as early as possible in the system's life cycle. The supply concepts discussed here deal with the resulting supply support to be provided to the using command during the operational phase.

a. Sources of supply. There will be two sources of supply for operational squadrons:

SECRET

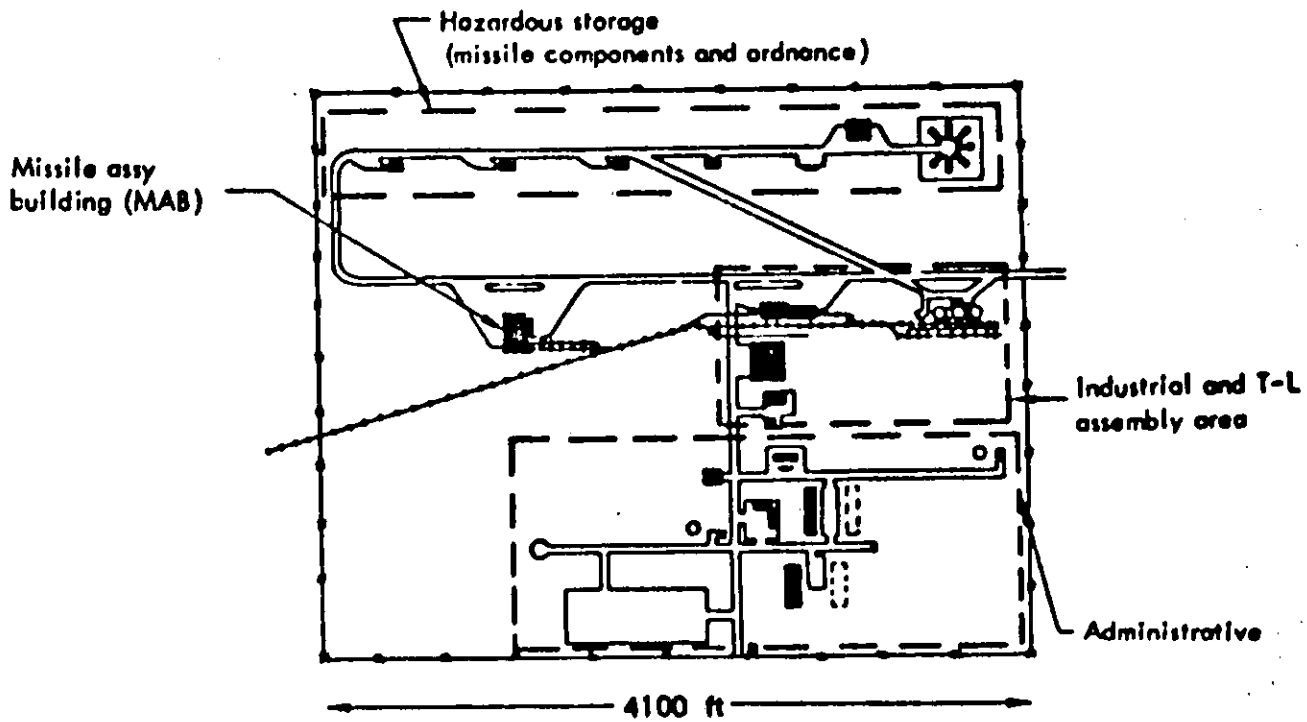

FIGURE 12 Squadron Maintenance Base

SECRET

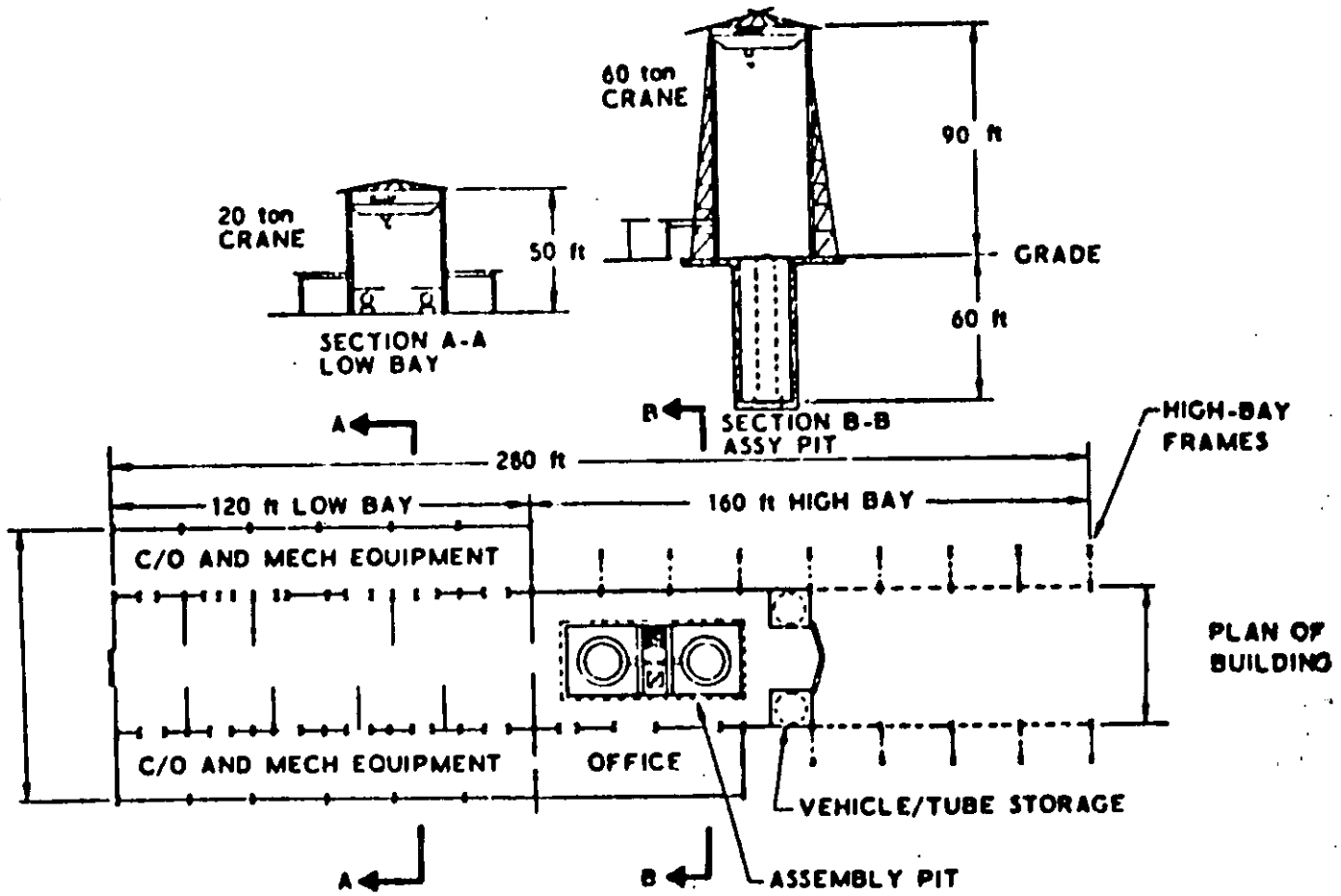

FIGURE 13 Missile Assembly Building

SECRET

(1) Mission support items are items required in direct support of the operational mission and will be provided directly by the Air Force Logistics Command System Support Manager or the Nuclear Ordnance Commodity Manager.

(2) Indirect support items will be obtained through the Base Supply Officer at the host base. The Base Supply Officer will obtain centrally procured items from the Air Force Logistics Command Inventory Manager or Defense Supply Agency as appropriate, and will issue a purchase request to the Base Procurement Officer for items coded for local procurement.

b. Stockage locations. Stockage locations for mission support spares and repair parts will be established as follows:

(1) At squadron maintenance base: Air Force weapons accounts supplied directly by the system support manager and nuclear ordnance commodity manager will be established at each squadron maintenance base to stock selected spares required in support of maintenance functions at that location.

(2) At wing maintenance base: If required, a separate Air Force weapons account will be established on the wing base to support the wing field level maintenance activity. If the wing is collocated on a base with an operational squadron, the squadron's Air Force weapons account will be expanded to include the additional range of spares required to service the wing maintenance activity.

(3) At specialized repair activities: Spares and repair parts required for depot level maintenance will be stocked at specialized repair activity locations.

(4) At weapon system storage site: Backup stocks of all direct mission support spares and repair parts used by the operational command will be stocked at a weapon system storage site and provided by the System Support Manager or the Nuclear Ordnance Commodity Manager as appropriate. This "stockage redundancy" is deliberate and intentional, in order to avoid or minimize "stock-out" conditions on this vital weapon system which might otherwise occur during the IM reprocurement cycle or newly developed peculiar items experiencing higher demands than anticipated, or on common items where lower priority users with earlier demands might exhaust the stocks originally programmed by the IM for support of this system.

(5) Fuel cache: The transporter-launcher fuel supplies will be located at pre-selected areas such that the transporter-launcher will be cycled to a fuel cache when approximately one half of the fuel load is consumed.

E. PERSONNEL REQUIREMENTS

The system manning estimates are based on a SAC-owned multiwing base organizational structure. Locating the strategic missile wing on an established heavy bombardment wing base is assumed in order to establish a baseline to determine base operating support augmentation. The manning requirements are based on a 144 unit equipment strategic missile wing consisting of three strategic missile squadrons of 48 unit equipments each. The resulting manning estimates for the 144 unit equipment wing are as follows (SAC coordination on these specific numbers is not official.):

	Officer	Airmen	Civilian	Total
Direct Support	1476	3160	104	4740
Base Operating Support	52	734	80	866
Augmentation Total	1528	3894	184	5606

SECRET

1. Strategic Missile Squadron

(1) Each of the transporter-launchers with launch control center capability carries a six-man crew of four launch control officers and two driver/guards. Crew manning ratio for this configuration is 4:1 and a 72 hour tour of duty.

(2) Each of the transporter-launchers without launch control center capability carries a four-man crew of two launch control officers and two driver/guards. Crew manning ratio for this configuration is 4:1 and a 72 hour tour of duty.

(3) Transporter-launcher crew relief is by helicopter and ground vehicle from the wing maintenance base.

(4) A squadron maintenance base is required for each strategic missile squadron and is assumed to be in the field.

2. Missile Maintenance Squadron

(1) A remove and replace capability is provided at the squadron maintenance base for all missiles' major subsystems.

(2) In the field, maintenance will include remove and replace of the transporter-launcher items. Two shifts at the squadron maintenance base have been assumed; duty day 8-hour shift plus standby crew on the third shift.

(3) Periodic inspections are performed at the squadron maintenance base.

(4) The squadron maintenance base is supported by the wing maintenance base which is located at the wing.

3. Security

A two-man strike alert team is provided for every ten transporter-launchers in support of the transporter-launcher crews. The transporter-launchers without launch control capability have

SECRET

unclas

two driver/guards and two officers. This manning was established to provide for on-board security and positive control of the missile system. The security will utilize helicopters or ground vehicles as needed.

4. Special Training Requirements

Training programs are developed with the objective of providing timely and effective manning of operational weapon units consistent with the development and deployment of the operational weapon system. Additional objectives are replacement training at both the individual and crew levels, unit training, and proficiency evaluation training at operational units to maintain the maximum personnel capability.

Command responsibility for training is as follows:

Training Requirement	Responsible Command
Individual Training	ATC
Individual Replacement Training	ATC
Operational Readiness Training	SAC
Proficiency Training	SAC
Unit Training	SAC

System requirements analysis data, Air Force directives, operational and logistic concepts will be utilized in development of QQPRI and overall weapon system personnel manning requirements. Squadrons, when possible, will be based on or near established bases and operate continuously. Special attention will be paid to biomedical and life support factors.

F. SECURITY

Prevention of surreptitious take-over of a transporter-launcher or transporter-launcher/launch control center, compromise of codes and coding equipment, and access to the warhead and launch function appear to be the major items of concern. To counter these threats, transporter-launcher and transporter-launcher/launch control center crew members will carry side-arms. In addition, tamper-proof

SECRET

destruct devices will be installed, which can be activated if the transporter-launcher or transporter-launcher/launch control center is attacked. When the transporter-launcher or transporter-launcher/launch control center is approached by unknown personnel, a combat surveillance radar with a range of 5000 meters for personnel and 18,000 meters for moving vehicles will alert the crew. On closer approach, intruders will be challenged by the crew, using a public address system on board. They will be instructed to stay clear. If their approach is continued, they will be considered hostile and the transporter-launcher or transporter-launcher/launch control center, when able, will then move away at maximum speed, and a security team will be called in. This team, consisting of two people, will arrive in 30 min or less in the security helicopter from the squadron maintenance base.

The external intrusion detection system shall consist of two separate intrusion detection elements. The first element, which will provide surveillance while the vehicle is stopped, consists of an electromagnetic device which detects man-size objects entering its omnidirectional sensing field. The radiated signal from this device will be monitored at the launch control console. The radiating element consists of four vertical dipole antennas, one mounted at each corner of the transporter-launcher and transporter-launcher/launch control center. These antennas are in turn energized by a closely coupled oscillator. The receiving element of this detection system will consist of a multiplex receiver and an audio visual alarm to indicate which antenna is producing an intrusion signal.

Security at the squadron maintenance base involves manning the main gate and the squadron headquarters. Roving patrols survey the squadron maintenance base area and in addition periodically visit the deployment areas to inspect roads, bench marks, fuel caches, etc. These roving patrols would be available as backup in the event the security helicopter is unable to respond to an alert call from a transporter-launcher or mobile launch control center.

SECRET

IV. FUNCTIONAL DESCRIPTION

A. CONCEPT OF OPERATION

1. Mission and System Operation

a. Mission. The mission assigned to the Land Mobile System by CINCSAC is the destruction of such targets on the national strategic target list as may be designated in the single integrated operational plan. The mission could include counterforce or countervalue targets or both. In the main, the force is committed to preselected target sites where the targeting data for the primary and alternate targets are stored onsite. Alternate targets, which may be identified by reconnaissance systems or other means, may be assigned to specific units in the operational force.

b. System Operation

(1) Pre-Attack Mode. The Land Mobile System employs a relatively soft transporter-launcher and relies upon random movement techniques for survivability. The transporter-launchers are deployed on a network of pioneer roads with typically 100 to 200 sq nmi of area being allocated to each transporter-launcher. The deployment concept has as a basic objective to deny the enemy a precise knowledge of transporter-launcher location, to force the enemy to an area bombardment attack and to so space the transporter-launchers to avoid multiple kill.

The normal mode of operation in the preattacked environment the transporter-launchers need be in motion only about 10 percent of the time or 2.4 hours on the average each day.

SECRET

Unclas

U unclas

It is believed that this mobility fraction is sufficient for the following purposes:

Maintain crew proficiency

Maintain transporter-launcher readiness

Reduce the probability of successful enemy cover action.

The normal mode of operation is employed as long as all segments of the strategic alert system are operating normally and indicating no need for increased alert.

If the early warning systems are inoperative, or jamned, or an enemy attack is sensed, the Land Mobile System operating procedure will be to increase the fraction of time that each transporter-launcher is in motion. There is no serious system degradation connected with increasing the average mobility fraction for all operational units to 16 hours a day with the one exception that the time in motion and the time the transporter-launcher is parked is divided such as to prevent overheating of the tires. The most severe threat against the Land Mobile System is a ballistic missile attack supplemented by a satellite observation system, with the latter being employed to reduce the uncertainty in transporter-launcher location.

It is anticipated that intermediate conditions between the maximum and minimum mobility fractions discussed above would be identified as a function of the DEFCON status.

(2) Post-Attack Mode. Provision is made to sustain the crew and provide power to the missile system for a [redacted] day post-attack period. The average time and motion for each transporter-launcher in this environment will be as specified by SAC or the Launch Control Officers in the transporter-launcher/launch control centers. Vehicle mobility can be maintained, if desired, at a high level through the use of fuel caches located within the operating area. The transporter-launcher achieves its maximum

SECRET

U unclas

hardness when the frame and grid are lowered to the ground. Thus, each time the transporter-launcher has completed a move, the frame and grid are lowered to penetrate the ground and increase the transporter-launcher's resistance to nuclear weapon blast effects.

(3) Launch Sequence. Upon receipt of a valid launch enable command, the launch control officers in the transporter-launcher/launch control centers direct the particular transporter-launcher or transporter-launchers to be brought to a stop. The transporter-launcher crew is directed to initiate the necessary actions to prepare for missile launch which includes leveling the transporter-launcher with an automatic jacking system, initiating fine gyrocompassing mode of the guidance system, entering launch position data, and performing checkout of the missile and launch equipment. The transporter-launcher crew maintains the system in the hardened ready condition and reports system status to the primary transporter-launcher/launch control center and only erects the missile upon command from the transporter-launcher/launch control center which requires approximately 5 min. This strategic alert posture can be achieved in approximately 10 min and can be launched with degraded accuracy at that time. To refine the guidance system azimuth alignment from a value of approximately arc sec to arc sec to achieve the best system accuracy requires approximately Missile launch is accomplished when two valid launch votes are initiated by the transporter-launcher/launch control centers within the squadron or by cooperative action of one transporter-launcher/launch control center and an airborne launch control center.

2. Command and Control

CINCSAC is the designated commander who will receive nuclear weapon expenditure authorization from the President of the United States or his designated alternates through the JCS command post. This authorization is translated by the SAC command post or SAC alternates

SECRET
Nuclas

into the actions necessary to implement the war plan in accordance with the current single integrated operational plan previously approved by SECDEF.

Instructions to implement existing Emergency War Orders are transmitted to the operational units for action and to intervening commands for information using the communication links described in Section III-B. Upon authorization by SAC, both the transporter-launcher/launch control centers and the airborne launch control centers initiate enable commands for implementation of the specified Emergency War Orders. Targeting data for each operational missile are stored in the ground data processor and the missileborne computer in accordance with the established war plans. The communication links and procedures used in implementing the war plan including a detailed description of weapon control are described in Section III-B.

3. Weapons System Maintenance

The maintenance concept of the Land Mobile System is directed toward the rapid return of an inoperative weapon to a fully operational status. This concept is based on the removal/replacement principle at the lowest operating level and emphasizes minimum inspection and adjustment requirements. The maintenance structure will consist of the three levels of maintenance described in AFR-66-1--organization, field, and depot. The firm division of responsibility between the maintenance levels will be determined by organizational structure, distances involved, and the size and/or complexity of the system components. Mobile missile system maintenance will be divided into the following purpose classifications.

a. Mission Maintenance. Directly aimed at maximizing in-commission rates. Primarily a remove and replace function at the operating location by organizational maintenance personnel, aided by field and depot personnel as required.

b. Resupply Maintenance. Designed to replenish serviceable stocks, through repair at field and depot facilities, in support of the organizational mission. Further breakdown of maintenance functions and

SECRET

structure by major subsystems, to include transporter-launcher, guidance, reentry vehicles, land navigation, and propulsion system will be devised as system particulars develop.

4. Transporter-Launcher and Transporter-Launcher/Launch Control Center

a. Transporter-Launcher and Transporter-Launcher/Launch Control Center Operational Location. In addition to routine inspection, testing, servicing, adjusting, and limited calibration, crew maintenance will include minor vehicular repair and removal/replacement of selected assemblies and subassemblies of the missile erection and launch equipment and ancillary equipment, such as auxiliary power and environmental control. Mobile maintenance teams will be dispatched, by surface vehicles or helicopters, to the transporter-launcher or transporter-launcher/launch control center operational location (maintenance shed) with required tools and spares, to augment the crew capability when such action will expedite the return to in-commission status. Mobile maintenance may require the dispatch of surface transportable or air transportable maintenance vans. "Flying crane" type helicopters can achieve air transporcability of vans.

b. Squadron Maintenance Base. The transporter-launcher or transporter-launcher/launch control center will be returned to the squadron maintenance base for required mission maintenance. The squadron maintenance base capability will include major vehicular repair as well as removal/replacement of equipment and assemblies and subassemblies. When permanent or semi-permanent major vehicular repair facilities are not available at the squadron maintenance base, surface transportable or air transportable ("flying crane" helicopter) maintenance vans will be used. This capability will be augmented by mobile teams from the special repair activity or MAB as required.

B. RELIABILITY

1. General

Reliability and availability estimates are based on current experience which has been assumed to be applicable to the advanced ICBM

SECRET

unclas

system. Basically, the hard and dispersed system reliability is utilized not considering any degradation due to mobility.

Availability
Reliability
Countdown, Boost
Nonreprogrammable
Availability/Reliability

2. Failure Rates

For that equipment which is not necessary to either maintaining mobility or launch capability, unscheduled transporter-launcher maintenance requirements are based on a mean time before failure of 175 operating (moving) hours.

The transporter-launcher system required to erect and launch the missile consists of the automatic leveling system, the erector mechanism, and the auxiliary power unit. The auxiliary power unit is backed up by the two diesel electric engines, providing triple redundancy. The automatic leveling system is expected to operate only during training exercises or upon receipt of a prepare-to-launch command. On this basis, its reliability is estimated at 7400 hours mean time before failure, or one failure per year per transporter-launcher. The erector mechanism is cycle sensitive and will fail about once per 12,000 cycles, and this failure rate is negligible.

C. OPERATIONAL FLOW DIAGRAMS

This section contains the operational flow diagrams for the Land Mobile System. The block diagrams depict the main functions required for an operational flow. Within the respective blocks, automatic checkout, monitoring, command and control operations, are included but not shown. Top level, first and second level operational flow diagrams are presented along with a representative third level (maintenance) operation block diagram (Figs. 14 through 24).

SECRET

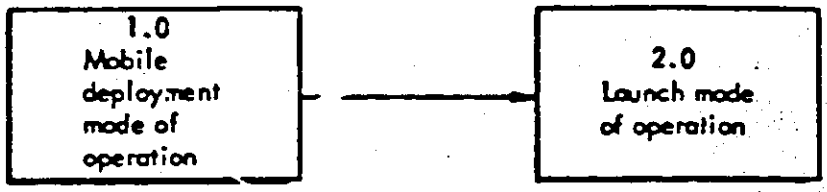

FIGURE 14 Top Level Operational Functional Flow Diagram

SECRET

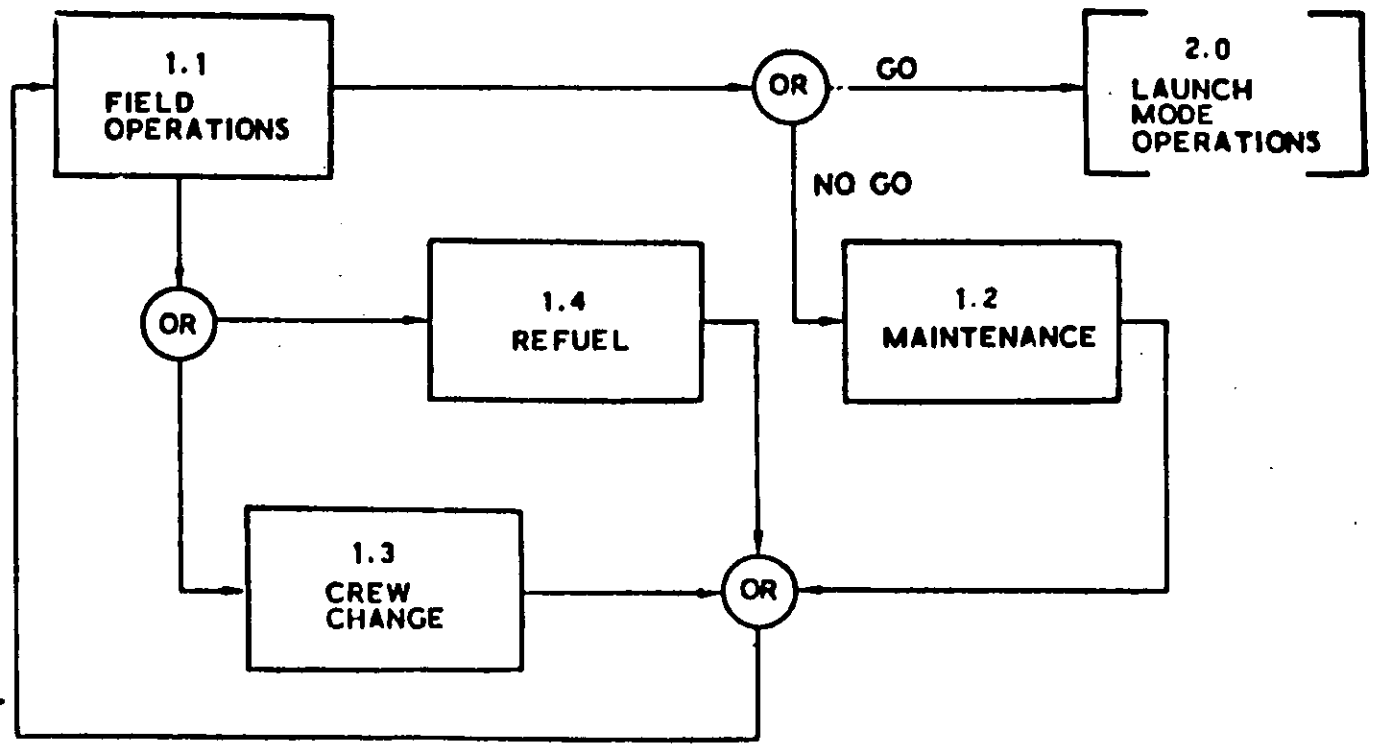

FIGURE 15 First Level Operational Functional Flow Diagram
(Block 1.0--Mobile Deployment Mode of Operation)

SECRET

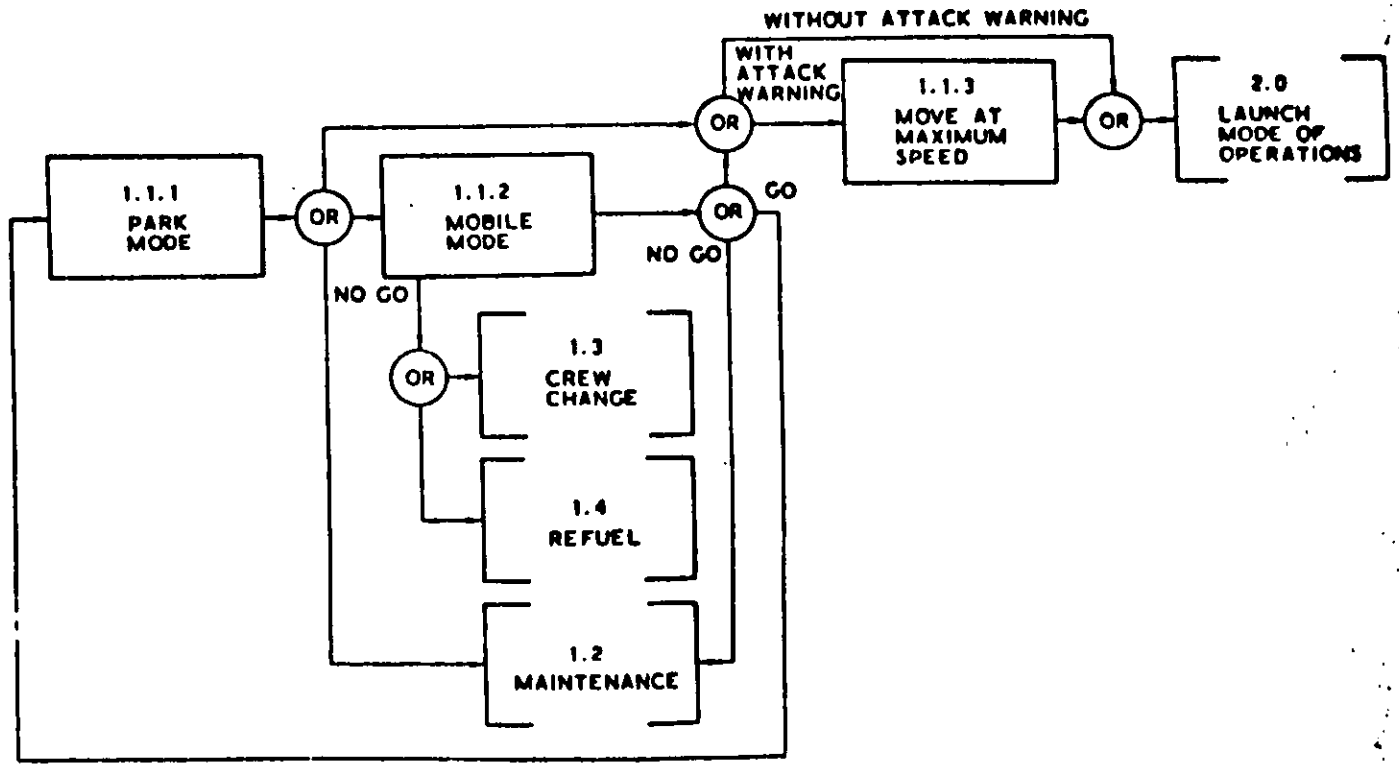

FIGURE 16 Second Level Operational Functional Flow Diagram
(Block 1.1--Field Operation)

SECRET

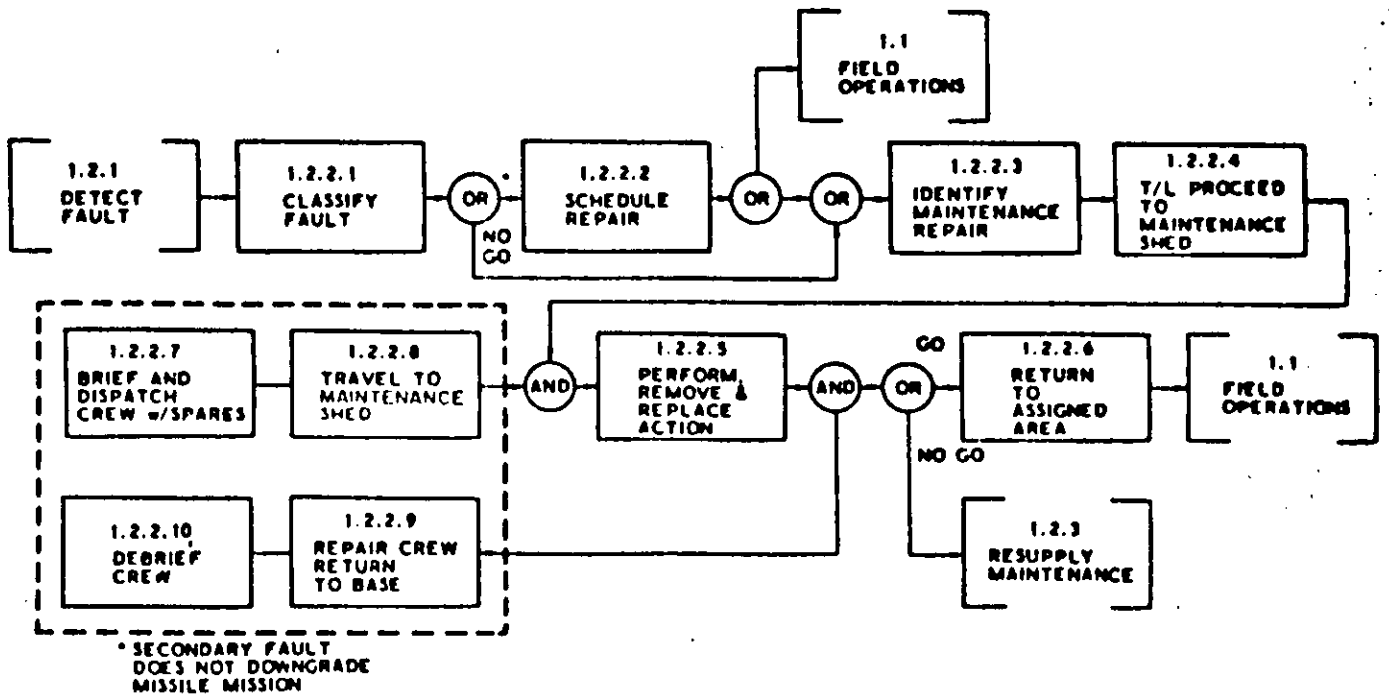

FIGURE 17 Third Level Operational Functional Flow Diagram
(Block 1.2.2--Mission Maintenance)

SECRET

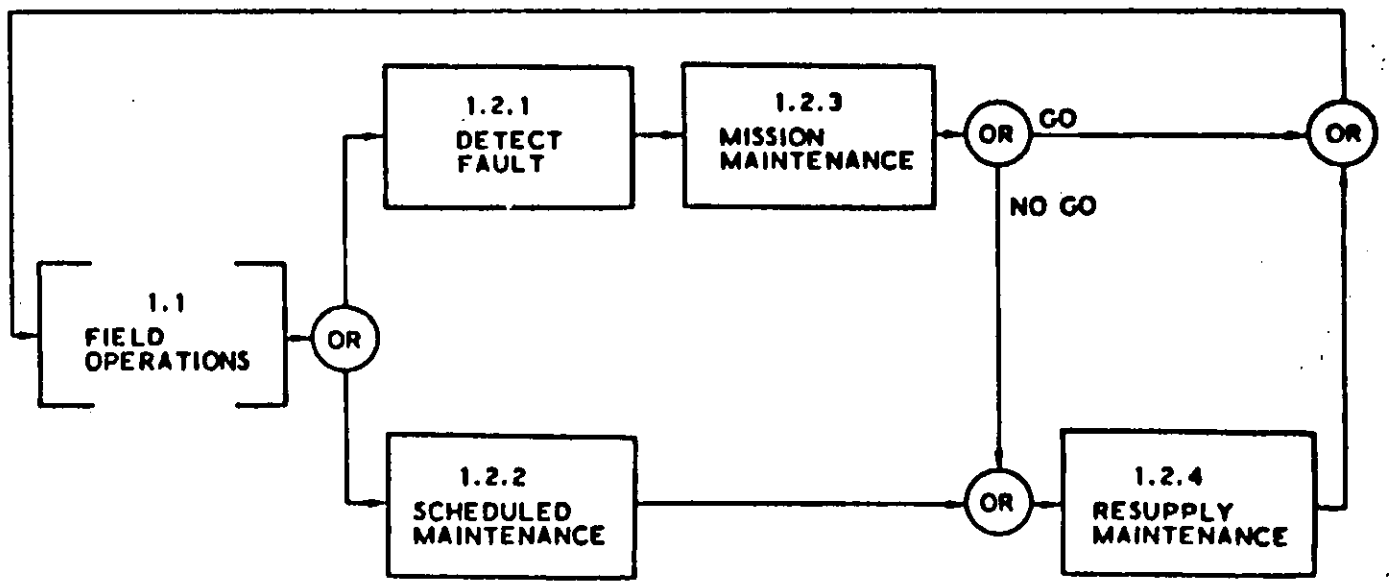

FIGURE 18 Second Level Operational Functional Flow Diagram
(Block 1.2--Maintenance)

SECRET

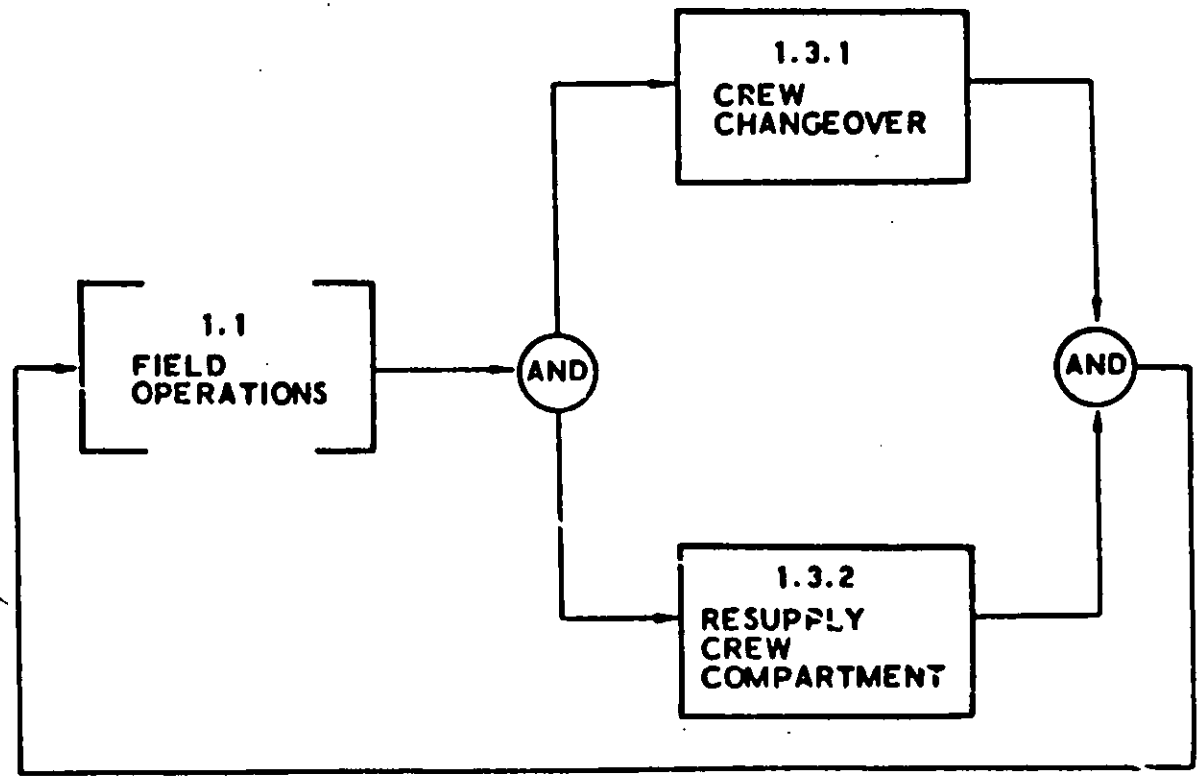

FIGURE 19 Second Level Operational Functional Flow Diagram
(Block 1.3--Crew Change)

SECRET

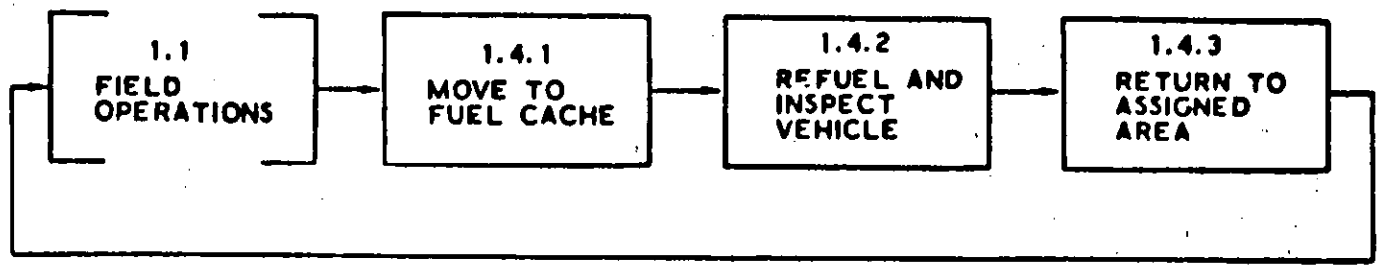

FIGURE 20 Second Level Operational Functional Flow Diagram
(Block 1.4--Refuel)

SECRET

Unclas

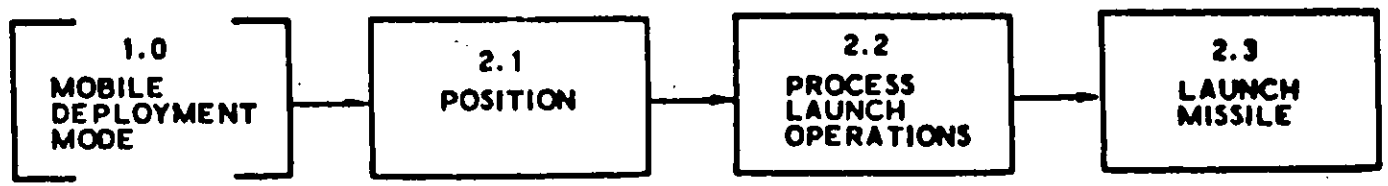

FIGURE 21 First Level Operational Functional Flow Diagram
(Block 2.0--Launch Mode of Operation)

SECRET

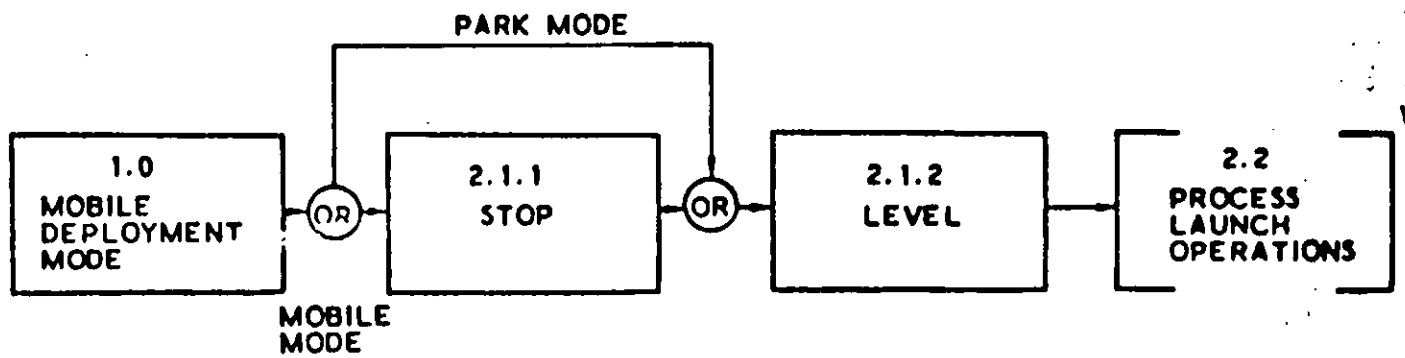

FIGURE 22 Second Level Operational Functional Flow Diagram
(Block 2.1--Position TL)

SECRET

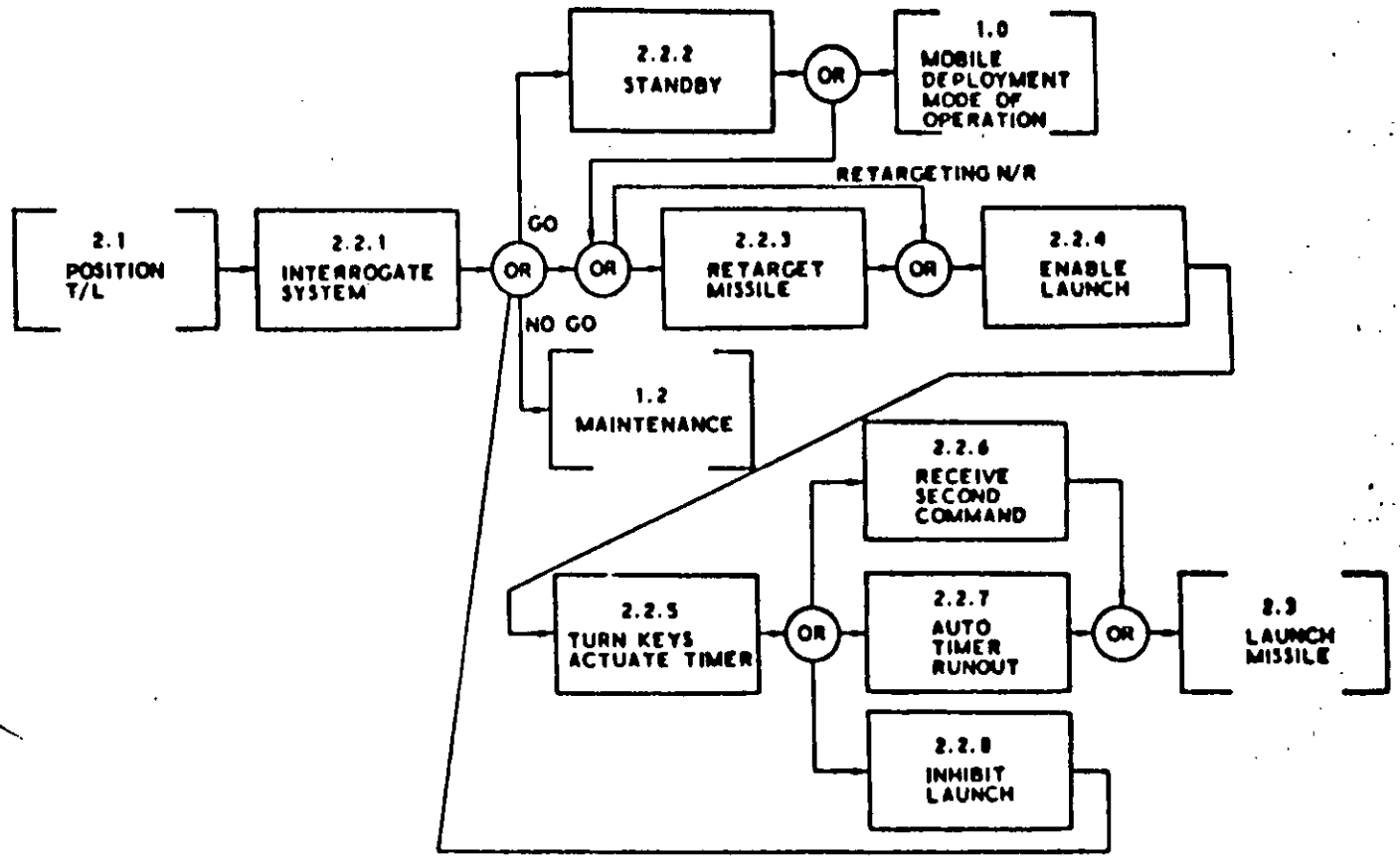

FIGURE 23 Functional Flow Diagram (Block 2.2--Process Launch Operations)

SECRET

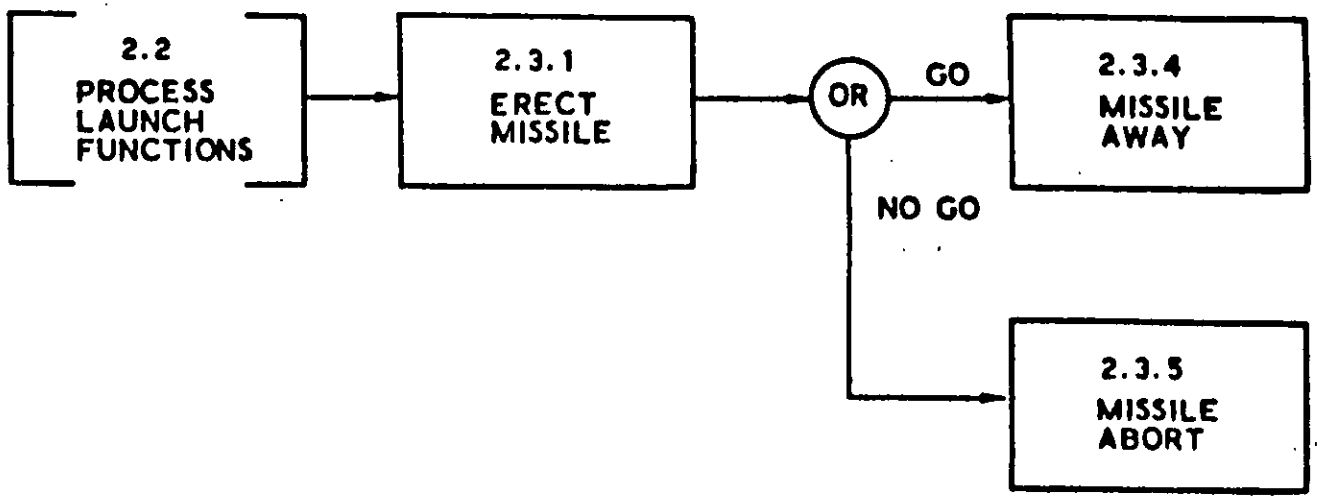

FIGURE 24 Second Level Operational Functional Flow Diagram
(Block 2.3--Launch Missile)

SECRET

V. OPERATIONAL TESTS

A. STANDARD TESTS

Three test categories are identified to be conducted during the operational service life of a strategic ballistic missile system. These are identified and defined in AFR 80-14, "Testing/Evaluation of Systems, Subsystems, and Equipments," as Demonstration and Shakedown Operations, Operational Tests, and Follow-on Operational Tests.

The objectives of the operational test program are to demonstrate and verify the system performance capability and to develop operational proficiency between the man and the weapon system. These programs will continue for the operational service life of the weapon system.

Two prototype transporter-launchers and transporter-launcher/launch control centers are scheduled for integration and mobility tests. These will be assembled and tested at a Squadron Maintenance Base scheduled for early activation. A checkout of both facility and transporter-launcher is thus accomplished.

Historically, flight testing has been conducted at Vandenberg Air Force Base into the Western Test Range. Twenty-five flights off of fixed launchers are included. Also, three first production transporter-launchers and a first production transporter-launcher/launch control center are provided for five launches utilizing the operational launch equipment.

In addition to the launch operations, the operational test program will exercise all ground and airborne elements of the weapon system on a routine basis. War conditions will be simulated to verify command/control capability under various conditions of attrition within the communication links. These exercises will be designed to develop crew

proficiency under simulated attack condition. Fatigue testing of the missile in its operational environment will be accomplished during the course of the program. The full impact of this fatigue testing as a function of time will not be known until this system has been deployed.

Continual exercising of the ground equipment and airborne vehicle equipment in operational and maintenance checkout modes will be accomplished at the operational sites.

The data derived from these operational tests will be used to refine reliability and performance estimates, planning factors, spares provisioning, and maintenance and logistics operations.

B. HARDNESS QUALIFICATION TESTS

Survivability philosophy requires that nuclear weapons hardness be designed into the system hardware. It is not practical, because of test facilities capabilities, to test a complete weapon system to most of the nuclear weapon environments. It has also been shown by past test and analysis methods that many effects are independent of the complete weapon configuration and valid testing can be performed at the subsystem, piece part or materials levels. Table 11 shows a matrix of tests required of the critical missile and weapon system items.

General testing required will be based on the design hardware and the contractor will perform a complete end-to-end check of all material, assemblies, or subsystems that may be vulnerable to any of the nuclear weapons specified, (Ballistics Systems Division Exhibit 1967, which has a probable publication date of September 1967). An analysis will be performed to determine the effects of the failure of each item on mission success. Any items which would cause mission failure or cause a degradation of system performance will be classified as "critical" items. A test and/or analysis plan will be developed to control the effects of the critical item on system survivability. In the case where materials or subsystems fall below the criteria of success, a substitution or a redesign will be made.

The establishment of transporter-launcher hardness on a full-scale basis would require simulation of a precursor wave. The magnitude,

SECRET

Unclas

TABLE 11. MATRIX OF WEAPON EFFECTS TESTS

	1 Materials	2 Piece Parts	3 Assemblies	4 Subsystem	5 System
A - Propulsion Case	X-D			B	
B - Case Propellant Bond		X			
C - Propellant	X				
D - Propulsion Controls		X-B			
E - Propulsion Nozzle			X		
F - Interstage Structure	X-D		B		
G - Ordnance Devices		X			
H - Inertial Measurement Unit	X	X-N-γ	X-N-γ		
I - Electronics		X-N-γ	X-N-γ	N-γ	
J - Power Supply		X-N-γ			
K - Ascent Shroud	X-D			B	
L - Post-Boost Vehicle Propulsion (Items A-E)	X-D	X-B	X	X-B	
M - Pen Aids	X-D	X			
N - Pen Aids	X-D	X-D	N	E	
O - Transporter-Launcher				B(1)	
P - Weapon System in Transporter-Launcher					E

(1) Scale model tests in wind tunnel and shock tunnel.

Code:

X--X-ray Tests
γ--γ-ray Tests

SECRET

form, and duration of the precursor wave is a function of a number of vari bles (surface irregularities, water content of soil, soil structure, atmospheric conditions, unknown parameters, etc.). Currently there does not ap. ar to be any feasible method for duplicating the precursor waveform for qualification testing.

SECRET

A. SYSTEM COSTS

The cost estimating and associated analysis for the Land Mobile System are based upon historical cost experience and methodology which have evolved as a result of experience in developing similar complex weapon systems. The costs presented in this volume were prepared by the System Design Team for design purposes and do not represent the STRAT-X systems cost as presented by the STRAT-X Cost Team. The costs prepared by the Design Team were submitted to the Cost team for analysis. For the official STRAT-X cost estimates, refer to STRAT-X Volume 19, "Costs".

A summary of the estimated system costs for the 7000 lb throw weight missile force is shown in Table 12. The following ground rules and assumptions were used in preparing the costs and are segregated for identification of responsibility.

TABLE 12 LAND MOBILE SYSTEM SUMMARY COST
[redacted] lb Throw Weight Missile System
($ Millions)

Cost Item	430 Force Total	430 Force Unit
RDT&E (Total)	$ 2,099.11	$ 4.88
Aerospace Ground Equipment, AVE,	5,839.06	13.58
Transporter-Launcher	455.48	1.06
Command and Control	337.29	0.78
Military Construction	124.38	0.29
Site Activation	443.00	1.03
Technical Data and Training	169.60	0.39
Other (Spares, etc.)	914.07	2.13
Total Investment	$ 8,282.88	$19.26
10-Year Operation and Maintenance (Total)	$ 2,902.21	$ 6.75
Total Force System	$13,284.20	$30.89

SECRET

nuclas

1. General

(a) lb throw weight missile system deploys 430 unit equipment (144 unit equipment/wing).

(b) One transporter-launcher will function as a complete command and control station for every ten transporter-launchers deployed in the field.

2. Research, Development, Test and Evaluation

The following cost items are included assuming that the RDT&E phase is completed at initial operational capability:

(1) Five demonstration and shakeout operation test missiles and launches (STRAT-X ground rule).

(2) A 15 month contract definition phase.

(3) A development cost for warheads.

(4) Integration of the missile with the transporter-launcher launch tube is the prime responsibility of the missile contractor.

(5) Cost estimate includes training for USAF personnel for Category II Testing.

(6) Five missiles of the 45 demonstration and shakedown operations/operational test requirements are designated for launch from the transporter-launchers. Two launches will be made from unmanned transporter-launchers, and three launches from manned transporter-launchers to man-rate the system.

(7) Site mobility tests for the transporter-launcher will require an instrumented dummy missile. Costs for this dummy missile are not included.

(8) Cost for missile assembly building construction and transporter-launcher support facilities at AFWTR are not included.

(9) Cost for AFWTR range support is not included.

3. Investment (STRAT-X)

(1) Spare missiles are factored at 3 percent of the deployed force.

(2) Reentry vehicle spares are factored at 3 percent of the total production buy quantity.

SECRET

(3) The [redacted] lb throw weight missile contains [redacted] reentry vehicles and [redacted] warheads.

(4) Operational warhead spares are factored at 3 percent of the total production buy.

(5) [redacted]

(6) Spare missiles will include operational reentry vehicles and warheads.

(7) Three instrumented dummy reentry vehicles are required for each operational and follow-on operational test missile. All other reentry vehicles are noninstrumented dummies.

(8) Reentry vehicle for demonstration and shakedown operations requirements are all noninstrumented dummies.

(9) ADC support is estimated at an annual operating direct cost of [redacted] per warhead per year.

4. Investment (Additional)

(1) Cost of 200 follow-on operational test missiles and launches is amortized in investment.

(2) Total missile production buy includes force deployed, 200 follow-on operational tests, spares, and 45 demonstration and shakedown operations/operational tests.

(3) Cost for demonstration and shakedown operations/operational tests missiles is excluded from investment costs.

(4) Cost for land acquisition is not included.

(5) Minimum cost for transporter-launcher pioneer road is included. No costs for bridges, culverts, etc. are included in road costs. Maintenance for these roads is considered to be accomplished by Air Force personnel with costs for the road maintenance equipment included in the vehicle section.

(6) Aerospace ground equipment costs exclude the transporter-launcher and launch tube (shown separately), but includes aerospace ground equipment within the transporter-launcher except that which is associated with the command and control equipment. Cost also includes equipment for squadron/wing bases, missile and combat training. Launch command and

SECRET

control equipment is excluded from the aerospace ground equipment cost item and shown separately.

(7) Total production buy of transporter-launchers includes deployed force, one spare per squadron and four transporter-launchers for follow-on operational tests requirements.

(8) Command and control equipment includes that command and control equipment in all transporter-launchers, squadron, and wing bases.

(9) Military construction includes assembly buildings for transporter-launchers, squadron buildings for transporter-launchers, squadron transporter-launcher roads, and squadron/wing facilities for the missile. Excluded are costs for refurbishing and expanding follow-on operational tests launch sites.

(10) Site activation costs include activation of transporter-launchers, missiles, and squadron/wing facilities.

(11) Technical data and training include cost for training equipment, and technical data for missile, transporter-launcher, training equipment, security equipment, test site equipment, aerospace ground equipment, and special vehicles.

(12) Other (spares, etc.) includes costs for transporter-launcher support equipment and special vehicles.

(13) Cost estimates did not include investigations of life cycle cost relationships, helicopters, initial spares and repair parts, and the transporter-launcher first destination transportation.

(14) Initial spares and repair parts factors have been increased to account for the 10 percent mobility factor for the force system.

(15) Cost for test range support is not included.

5. Operations and Maintenance (10-Year)

(1) Operations and maintenance includes costs for all pay and allowances, operations and maintenance of missile and associated equipment, transporter-launcher and associated vehicles.

SECRET

unclas

(2) Operations and maintenance for missile and associated equipment includes missile maintenance, organization equipment replacement, modification update, depot maintenance and replenishment spares for the missile and associated equipment.

(3) Operation factors, to determine missile operations and maintenance costs, were increased in consideration of 10 percent mobility requirements.

(4) Operation and maintenance cost for the transporter-launcher and associated vehicles includes petroleum, oil and lubricants for all vehicles, replenishment spares for all vehicles, service engineering, and replenishment training.

B. DEVELOPMENT SCHEDULE

A development schedule has been prepared which is shown in Fig. 25. There appears to be no fundamental reason why development of the Land Mobile System would be different from the development schedule for an H&D system.

SECRET

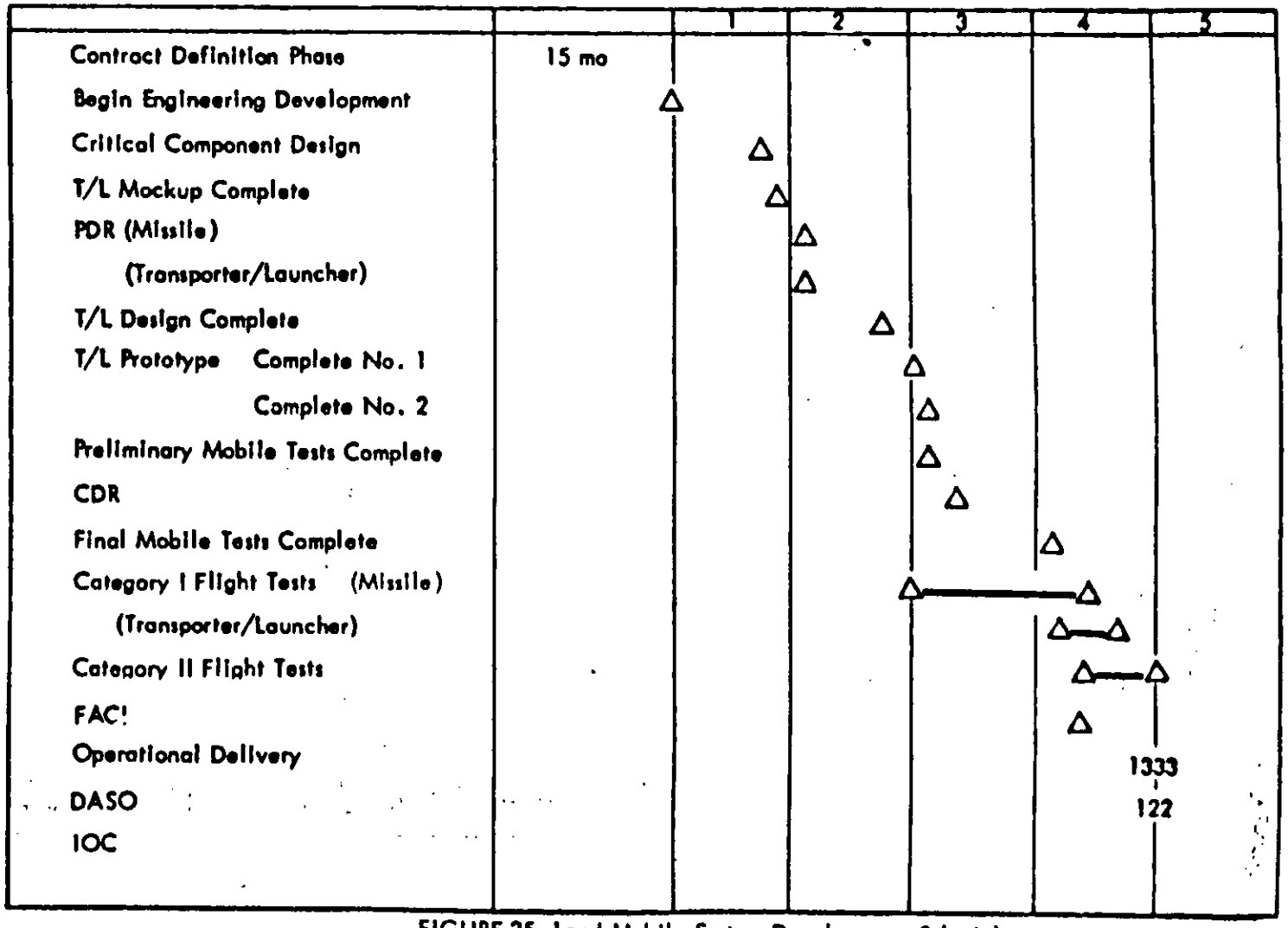

FIGURE 25 Land Mobile System Development Schedule

SECRET

VII. TECHNICAL RISKS AND TECHNOLOGY PROGRAMS

Most of the Land Mobile System equipment and the conditions under which it will be operated are well within the state-of-the-art and well understood. However, there are certain technical and operational risk areas and these will be presented in this section.

The major technical risk areas to be discussed are:

1. Transporter-launcher hardness
2. Transporter-launcher mobility
3. Transporter-launcher components
4. Missile environment
5. Post-boost vehicle
6. Command and control

The operation of the Land Mobile System is predicated on the availability of large amounts of public land. The risk connected with the acquisition of the land is discussed in Section B.

A. TECHNICAL RISK AREAS

1. _____

SECRET

unclas

[redacted]

2. Transporter-Launcher Mobility

[redacted]

SECRET

unclas

Travel paths will modify difficult terrain features to the deg necessary for achievement of mobility. During an extended period o deployment, wind and water erosion of these paths will occur and wi continue to occur thereafter unless preventive measures are underta The effect of erosion is twofold:

(1) Increasing roughness which will require pathway maintenan

(2) Deposits of dust and soil on adjacent terrain and in the drainage system of the area.

[redacted]

The effect of spreading the products of erosion in the adjacen countryside and water shed may, however, require more sophisticated road construction techniques than those outlined for the "primitive'

SECRET

Unclas

road and more path maintenance. During the Land Mobile System deployment, the restoration of vegetation and a modification of the path geometry may be necessary to restore a reasonable immunity to continuing erosion. The impact of these requirements upon system activation, operation and maintenance costs has not been assessed.

Both the Department of Interior and Department of Agriculture are extremely concerned with erosion on the public lands and any agreement that is reached for the use of these lands by the Air Force will include rigid requirements on the minimization and control of such erosion.

3. Transporter-Launcher Components

[redacted] Production control will be the major consideration.

[redacted]

4. Missile Environment

[redacted]

SECRET

unclas

[redacted]

5. Post-Boost Vehicle

[redacted]

[redacted]

SECRET
RESTRICTED DATA

unclas

6. [redacted]

B. OPERATIONAL RISK AREAS

1. [redacted]

SECRET

unclas

The net usable deployment area of [ ] sq nmi from the Martin STRAT-X Land Mobile Support Studies could be further reduced by the following:] 552(b)

a. Mining claims. Further investigation is needed on the extent, distribution, and status of mining claims, and on legal aspects regarding rights of claimees and the Government to determine the extent to which these areas can be circumvented and/or co-usage negotiations will have to be made. At worst, it is estimated that it could mean the [loss of [ ] sq nmi.] 552(b)(1)

b. Crucial wildlife habitats. Because these habitats are vital for the perpetuation of a species, wildlife experts will have to be consulted regarding compatibility of land mobile/random transporter-launcher operations within these areas. Rough estimates indicate that [more than [ ] nmi] fall into this category. 552(b)(1)

c. Land blocking and disposal. There is a continuing program of public land consolidation which is not expected to greatly affect the total amount of area, but which will affect its distribution. Public domain does pass into local government and private ownership in several ways: Federal Government program to sell off selected lands for state, county, and city uses; patented mining claims; homesteading, etc. Although no estimates can be made on land redistribution and disposal, it is expected to be relatively small and of little concern.

d. Land improvement. The federal government has a continuing program of improving range land which results in greater densities of grazing animals and fences. So this is a time-dependent variable that will progressively reduce the amount of area available and/or increase the costs of adapting to the resulting obstacles (more fences, roads, people, etc.). Not only can this factor become of considerable concern, but it will continue to grow throughout the lifetime of the system.

e. Land damage. [redacted]

SECRET

unclas

thunderstorms; locally strong winds; and pronounced diurnal temperature

Table 13 shows the number of passes over a given section of road for various mobility fractions on a monthly and yearly time basis.

TABLE 13. NUMBER OF PASSES OVER A GIVEN SECTION OF ROAD

Area sq nmi	Path Length nmi	Distance Traveled/Month (0.1 MF = 48 nmi/day) MF 0.1	0.25	0.5	0.8	No. Passes/Month MF 0.1	0.25	0.5	0.8
144	168	1,440	3,600	7,200	11,520	9	21	43	69
100	120					12	30	60	96
64	80					18	45	90	144

Area sq nmi	Path Length nmi	Distance Traveled/Year (0.1 MF = 48 nmi/day) MF 0.1	0.25	0.5	0.8	No. Passes/Year MF 0.1	0.25	0.5	0.8
144	168	17,520	43,800	87,600	140,160	104	261	521	834
100	120					146	365	730	1168
64	80					219	547	1095	1752

SECRET

Nuclas

f. Watershed and water quality. [redacted]

At the first two of the three meetings held with the Bureau of Land Management, U.S. Forest Service and Bureau of Indian Affairs, the greatest problems anticipated were people-oriented such as mining claims, uncooperative ranchers, recreational uses, and public reaction. However, at the last meeting, which included technical as well as administrative personnel, it was brought out that both the Bureau of Land Management and the U.S. Forest Service would require "impact surveys" to determine land damage potential, as well as compatibility of land usage, before negotiations for land acquisition could be considered.

g. Other uses and public reaction. Although most of the deployment area lands are generally considered remote and of little value, it is surprising how much activity occurs on them. Recreation in the form of camping, fishing, hunting, rock-hunting, sand dune surfing, etc., is expanding more and more into these regions as our population increases and more leisure time is available for traveling. Special interest activities include professional and amateur archeological, geological, wildlife, and botanical endeavors; mineral prospecting, ranching, etc. To what extent such activities may not be compatible with land mobile/random deployment is an open question at this time. Both those groups of people actually using these lands for recreational, commercial, and scientific purposes and those who may not actually visit, but who are concerned about preservation of our natural landscape

SECRET

6 unclas

and its native inhabitants, constitute a significant contingent of the public whose reaction cannot be ignored. Public reaction will be a difficult factor to assess, if possible at all.

SECRET

VIII. ALTERNATE 2000-POUND THROW WEIGHT BOOSTER

This section presents a description and pertinent performance, technical, and cost data for an alternate land mobile system based on a 2000-lb throw weight booster. This is followed by a comparative evaluation of this and the [redacted] lb booster previously described from the point of view of operations, effectiveness, and cost. For simplicity, the two boosters will be referred to simply as the 2000-lb and the [redacted] missiles, respectively, it being understood that this refers to throw weight, and not to booster gross weight.

Figure 26 presents a summary of the 2000-lb missile system characteristics. An in-board profile similar to Table 1 for the [redacted] lb missile system and outline drawings of the transporter-launcher are shown in Figs. 27 and 28, respectively. A detailed summary of the missile characteristics is presented in Table 14. Costs are shown in Table 15. Other aspects of the system, such as operating concept, land availability, command and control, etc. are essentially identical with those of the [redacted] system already described.

SECRET
6 unclas

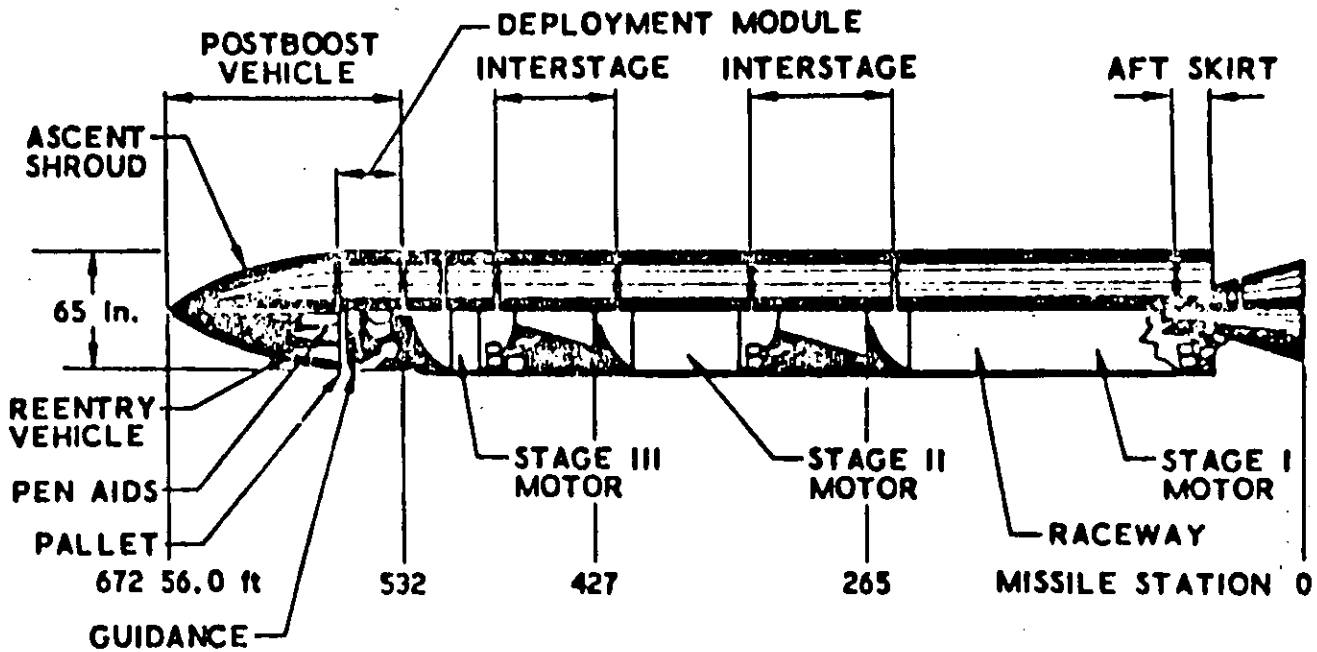

FIGURE 27 2000-lb Throw Weight Airborne Vehicle Configuration

SECRET

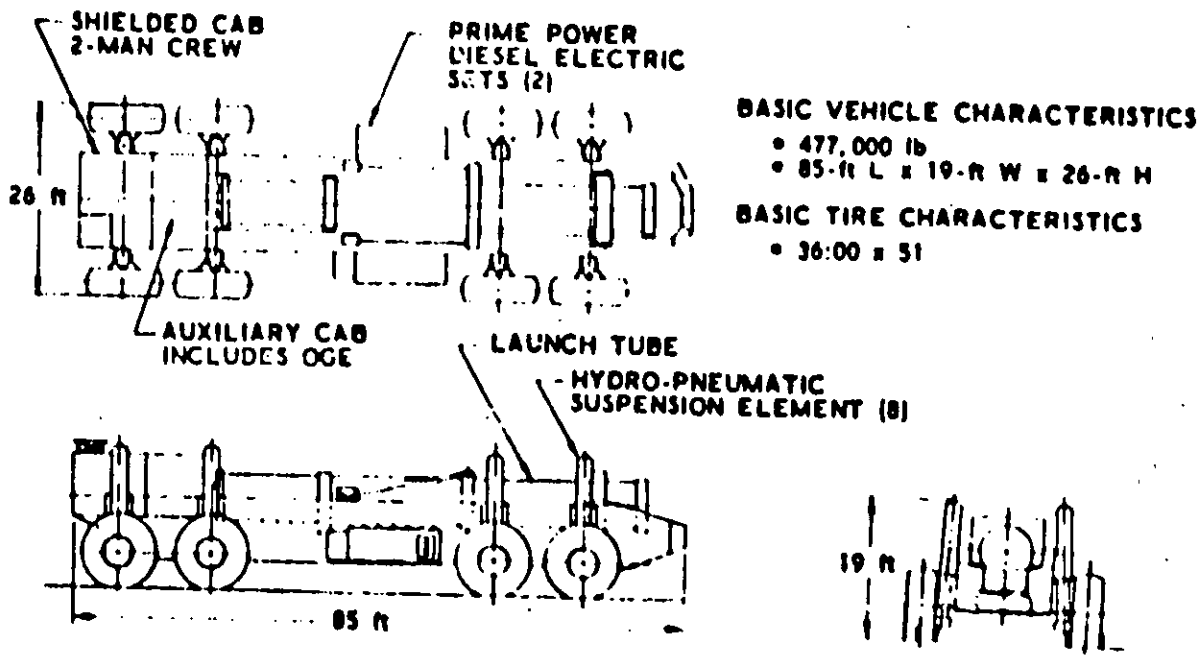

FIGURE 28 Transporter-Launcher Configuration

SECRET

Table 14 SUMMARY OF MISSILE CHARACTERISTICS

Throw Weight Capability, lb	[redacted] 6500 nmi at $\gamma=22^{\circ}$
Gross Vehicle Weight, lb	76,530
Missile Length, ft	56.0
Propellant (all stages)	Composite type with polybutadiene binder
Loading - %	88
Aluminum	20
NH_4ClO_4 - %	68
I_{sp}, sec (std. ref.)	250
Density, lb/in.^{3}	0.065
Grain Design (all stages)	Cylindrically perforated
Nozzle (all stages)	Single submerged (approximately 30% swivel type)
Seal	Advanced gimbaling concepts
Liner	Ablative plastic
Thrust Vector Control (pitch and yaw)	Hydraulic actuation of nozzle
Thrust Vector Control (roll)	Gas generator and nozzles
Thrust Termination (third stage)	Linear shaped charge on forward dome
Interstage structure	Semimonocoque
Motor Case Material (all stages)	S-994 glass filament, epoxy composite
Performance Reserve	2% of I_{sp} (3) per stage (RSS)

Stage Characteristics

	I	II	III
Stage Weight, lb	44,700	20,860	8,940
Propellant Weight, lb	40,785	18,738	7,929
Stage mass ratio	0.91	0.90	0.89
Stage diameter, in.	65	65	65
Stage length, in.	265	162	105
Chamber pressure, psi	1,000	1,000	700
Nozzle expansion ratio	15	35	50
Burn time, sec	57	55	72
Thrust (vac), lb	197,510	98,670	32,430
Case safety factor	1.25	1.25	1.25

SECRET

unclas

Table 15 LAND MOBILE SYSTEM SUMMARY COST
[redacted] Missile System
($ Millions)

Cost Item	1500 Force Total	1500 Force Unit Equipment
RDT&E (Total)	$ 1,735.51	$ 1.16
AGE, AVE, [redacted]	6,813.75	4.54
Transporter-Launcher	657.85	0.44
Command and Control	1,152.32	0.77
Military Construction	386.70	0.26
Site Activation	1,534.00	1.02
Tech Data and Training	575.00	0.38
Other (Spares, etc.)	1,638.77	1.09
TOTAL INVESTMENT	$12,758,39	$ 8.50
10-Year O&M (TOTAL)	$ 8,221.72	$ 5.48
TOTAL Force System	$22,715.62	$15.14

SECRET

unclas

IX. SYSTEM FEATURES

This section is a summarization of the main features of the Land Mobile System which make it attractive from the STRAT-X point of vie Some of these features are unique to the Land Mobile System; others a shared by one or more of the other candidate systems. These features are as follows.

1. High Survivability

If the enemy is unable to devise an economic surveillance, targeting, and reentry vehicle reguidance system, the Land Mobile System operates as a true area system, which, if less than about 6 million lb of U.S. throw weight is deployed, would force the Soviets to rely on their urban defenses.

2. Estimates of the Expense of a Soviet Surveillance

Targeting and reentry vehicle reguidance costs are very high and felt to be independent of the number of transporter-launchers deploye This suggests the option of deploying a small but significant (one wing) force for which it would not pay the Soviets to develop and deploy their surveillance system. High survivability is thus achieve by remaining below a force size threshold determined either by the Soviets urban defense technology (and economy) or the Soviets surveillance technology (and economy).

3. Payload Flexibility

In common with all the [redacted] lb throw weight STRAT-X systems, the Land Mobile System offers a flexible payload capability, having a choice of using various combinations with Mark 12, Mark 17, or Referenced Multiple Reentry Vehicle warheads, coupled with appropriat mix of chaff, decoys and other penetration aids. The total package can be adjusted in weight by offloading to adjust for long range or widely diversified targets.

552(b)(1)

4. All Azimuth Capability

By providing a capability for a 360°F azimuth capability, the weapon system achieves complete targeting flexibility. Missiles may be retargeted to respond to an enemy threat in any part of the world.

5. Increased Range

By virtue of the increased range of the weapon system, the entire Asian mainland is easily within targeting range. This permits siting of the weapon system anywhere within the United States. Consequently, in siting decisions consideration should be given to dispersed weather, compatibility with defense, favorable radio propagation characteristics, cost factors, etc.

6. Lower CEP

The increased accuracy of the weapon system as manifested by the lower CEP results in capability to attack and destroy more enemy targets with a given payload.

7. Nuclear Hardness

The weapon system will employ components which are substantially hardened to nuclear radiation. This decreases system in-flight vulnerability and diminishes the threat of an enemy pin-down attack. In addition, this capability makes the system more compatible with potential United States defensive missile deployment.

8. Controlled Response Capabilities

As with other strategic systems, the Land Mobile System concept must provide a capability for controlled response in order to be considered a candidate for a next generation ICBM system. This system must be capable of responding at a desired level of intensity in order to meet the requirements for all conceivable enemy attacks.

Each launch control center and any airborne launch control center will be capable of selective or simultaneous enablement of all missiles within a squadron and of commanding a single launch vote to these missiles. Each launch control center and any airborne launch control

SECRET

unclas

center will be able to ensure emergency war order execution of pre-planned launch operations and respond to battle staff operational commands in trans- and post-attack situations.

SECRET

Cardon

X. BIBLIOGRAPHY

1. Off Road Mobile Support Studies, MCR 67-168, Martin-Marietta Corporation, dated May 1967.

2. Preliminary Study of a Transporter/Launcher for an Advanced Intercontinental Ballistic Missile Weapon System, TOR-1001(S2925-03)-5, Aerospace Corporation, dated December 1966

3. Off Road Mobile Transporter/Launcher Internal Radiation Environment Analysis FCK 320 Convair/General Dynamics, Fort Worth, dated November 1966.

4. ORM T/L Hardness Study - Criteria Development and Vehicle Characteristics Identification, ATM-67-(S2925-03)-1, Aerospace Corporation SBO, dated October 1966.

5. WS 120A Basing Options System Cost Analysis, TOR-1001(S2925-03) Aerospace Corporation SBO, dated October 1966.

6. WS 120A Advanced ICBM System Summary BSD-66-BSMZ-1-44, BSD, AFSC, USAF and Aerospace SBO, dated September 1966.

7. Preliminary Technical Development Plan for Advanced ICBM WS 120A, AFSC, USAF, dated August 1966.

8. Technical Evaluation of the Martin Company Off-Road Mobile ICBM Study, TOR-1001(S2925-12)-1, Aerospace SBO, dated July 1966.

9. Study of Off-Road Mobile ICBM BSD-TR66-151, Martin Company, dated June 1966.

10. Concept Formulation Package Weapon System 120A, BSD, AFSC, USAF, and Aerospace SBO, dated June 1966.

11. Off Road Mobile ICBM Industry Study Data Package transmittal C65-3720SR-36 by Aerospace Corporation SBO, dated 18 August 1965.

Unclas

12. Area Availability for Off Road Mobility in United States BSD-TDR-65-382 Planning Research Corporation, dated June 1965.

13. Project Blue Lance Off Road Mobile ICBM (Minuteman) AFXSA-E2 650203, USAF, dated December 1965.

14. Semi-Mobile Deployment D2-24090-1, Boeing Company, dated December 1965.

15. Survey of Transporters for Missile Basing, TOR-469(S5923-42)-1, Aerospace SBO, dated May 1965.

16. Off Road Mobile ICBM (Mixed Deployment Minuteman) Weapon Systems Study (Work Statement), TOR-469(S5923-37)-1, Aerospace SBO, dated April 1965.

17. Project Golden Arrow, TOR-469(S5923-37)-2, Aerospace SBO, dated March 1965.

18. Minuteman Off Road Mobile Study Program, Boeing Company, dated October 1960.

19. A compilation of Some Advanced Ballistic Missile Concepts for Project 75, TOR-269(4921-40)-5.

20. Use of Early Warning to Improve Ballistic Missile Survivability BSD-TDR-63-173, North American Aviation, Inc., dated August 1963.

21. Armadillo; LTV Confidential Informal Report 2-5800/3M-296, dated August 1963.

22. Armadillo; ASD-TDR-63-165 AER/SLRMS LTV, dated 1963.

23. Armadillo, Combining Hardness and Mobility; LTV Unclassified Brochure, dated March 1960.

24. Slam Basing - Overland Vehicle LS-100-14, LTV, dated August 1959.

SECRET

This document contains information affecting the national defense of the United States within the meaning of the Espionage Laws, Title 18, U.S.C., Sections 793 and 794. The transmission or the revelation of its contents in any manner to an unauthorized person is prohibited by law.

EXCLUDED FROM AUTOMATIC DOWN-
GRADING AND DECLASSIFICATION